04_Machine Tool Builder

Introduction

This section outlines the steps required to define a kinematic chain within the Machine Tool Builder. The process involves navigating through the Ribbon Bar, accessing the Machine Tool Navigator from the resource bar, and subsequently creating the kinematic chain.

Navigation to Machine Tool Builder

1. Start by navigating to the Ribbon Bar.
2. Proceed to select "Applications."
3. Choose "More" from the dropdown menu.
4. Click on "Machine Tool Builder."

Defining the Kinematic Chain

1. After opening the Machine Tool Builder, locate the "Machine Tool Navigator" in the resource bar.
2. This area is where the kinematic chain will be defined.
3. As of now, the kinematic chain is empty, necessitating the creation of our customized kinematic chain.

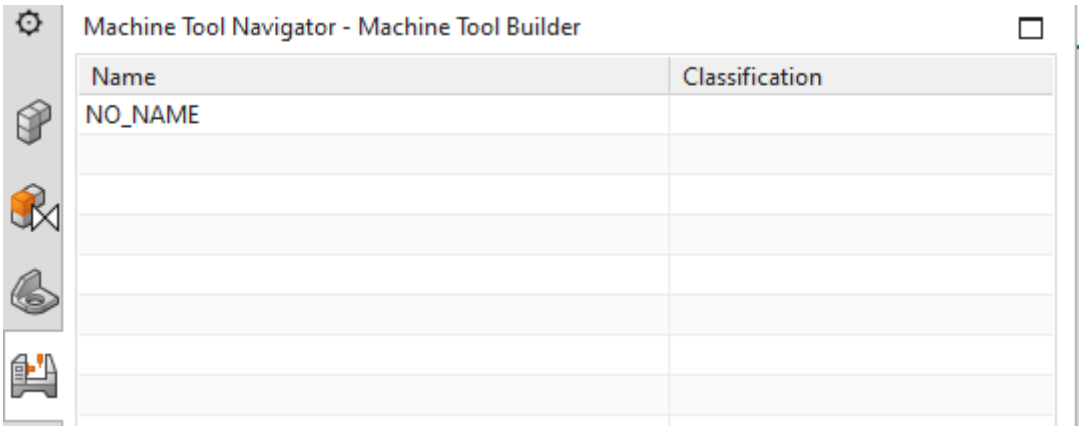

Click on "NO_NAME" and assign the name we previously agreed upon.

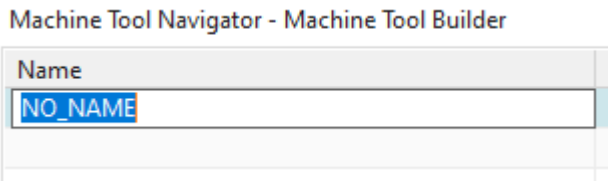

Machine Tool Navigator - Machine Tool Builder

Name
FANUCM20IA_FRONIUS_RA5000_CMT

The initial element of the kinematics chain is the "Machine Base Component." To define it, right-click on the robot name, then select "Insert," followed by "Machine Base Component."

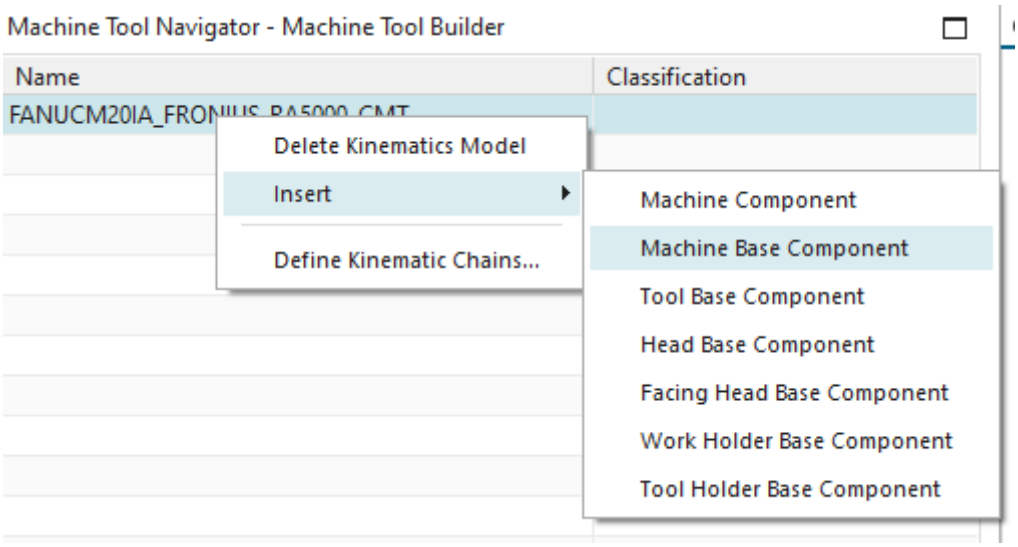

The first element of the kinematics chain, the "Machine Base Component," is now created.

Machine Tool Navigator - Machine Tool Builder

Name	Classification
FANUCM20IA_FRONIUS_RA5000_CMT	
MACHINE_BASE	_MACHINE_BASE

Moving forward, our next steps involve the creation of additional elements for the kinematic chain. Once these elements are established, we will proceed to organize them accordingly.

From now on, We will only inser “Machine Component” and name them accordingly

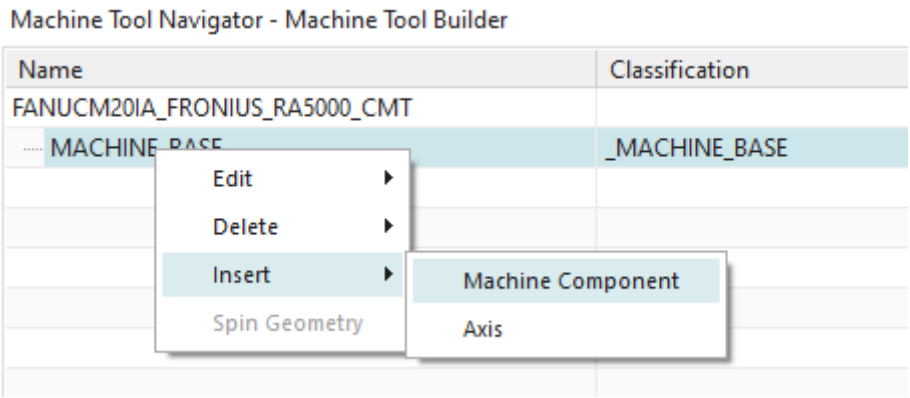

We will name the next one as “ROBOT_BASE”

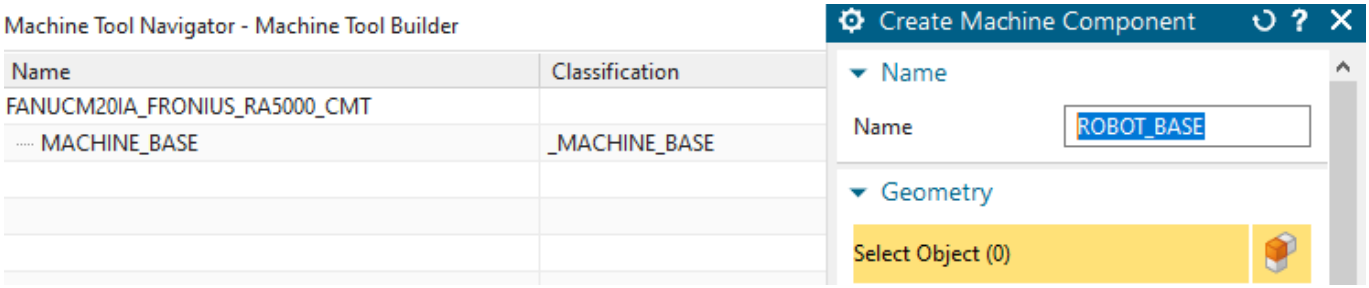

ROBOT_BASE created

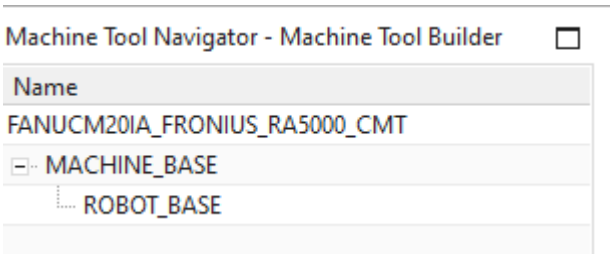

Moving forward, our next steps involve the creation of additional elements for the kinematic chain. Once these elements are established, we will proceed to organize them accordingly.

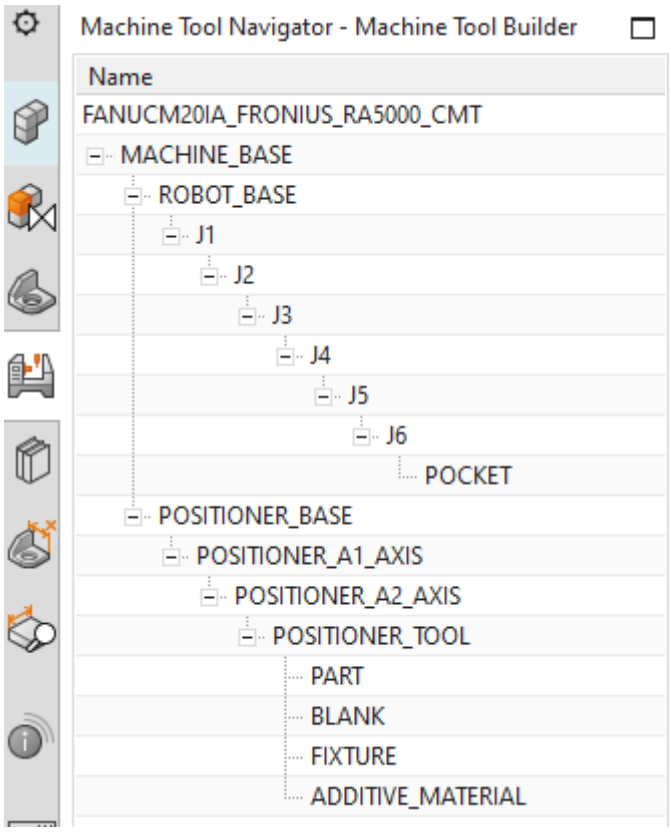

It's worth noting that the kinematic chain described above is a typical configuration for an additive robot paired with a positioner.

Now that we have successfully established the kinematic chain, our next course of action is to define and organize these elements.

We will begin this process by focusing on the "Machine Base" element, where we will define the specific geometries associated with the machine base component.

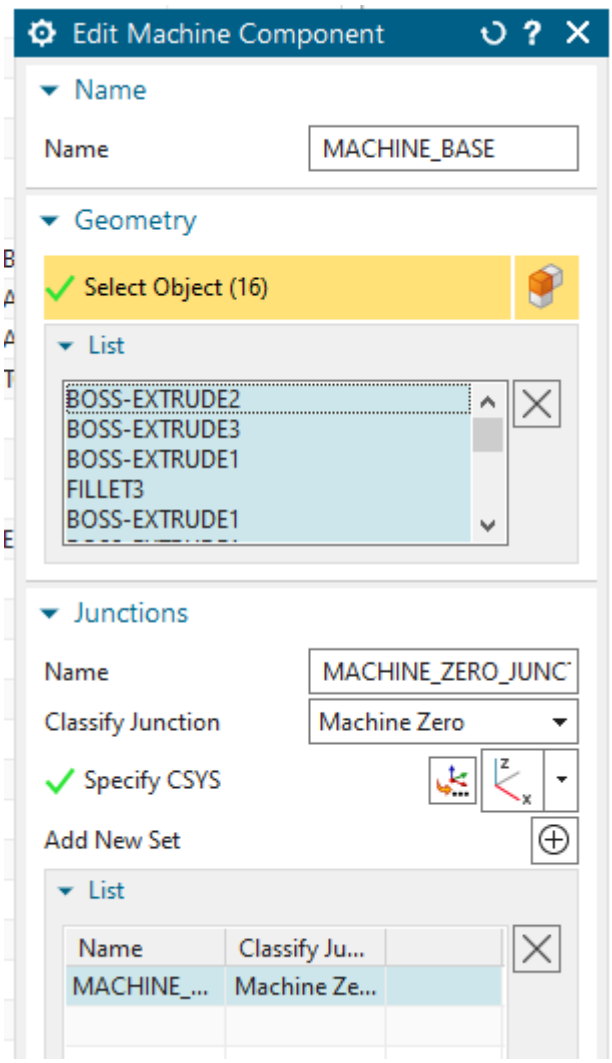

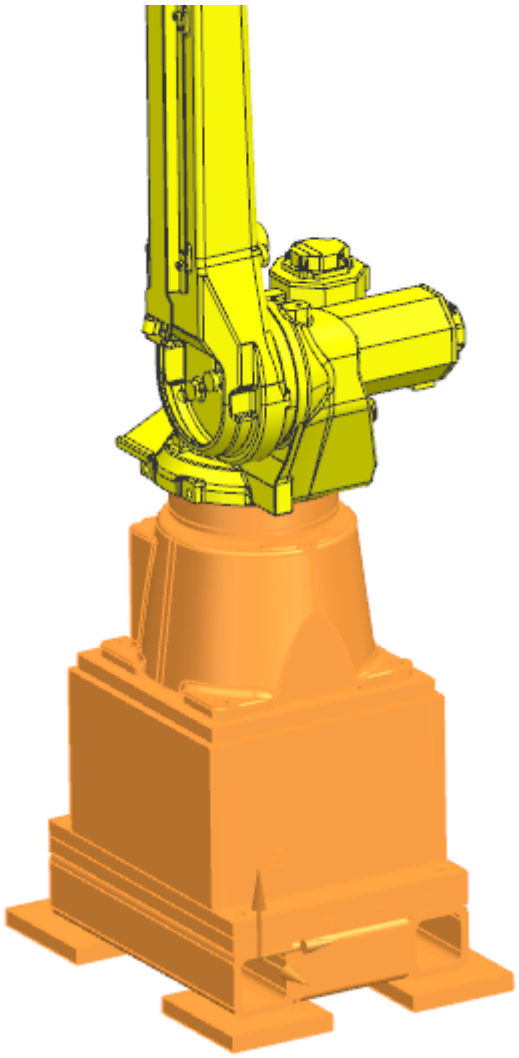

The Coordinate System (CSYS) has been established at the lower surface of the foundational component.

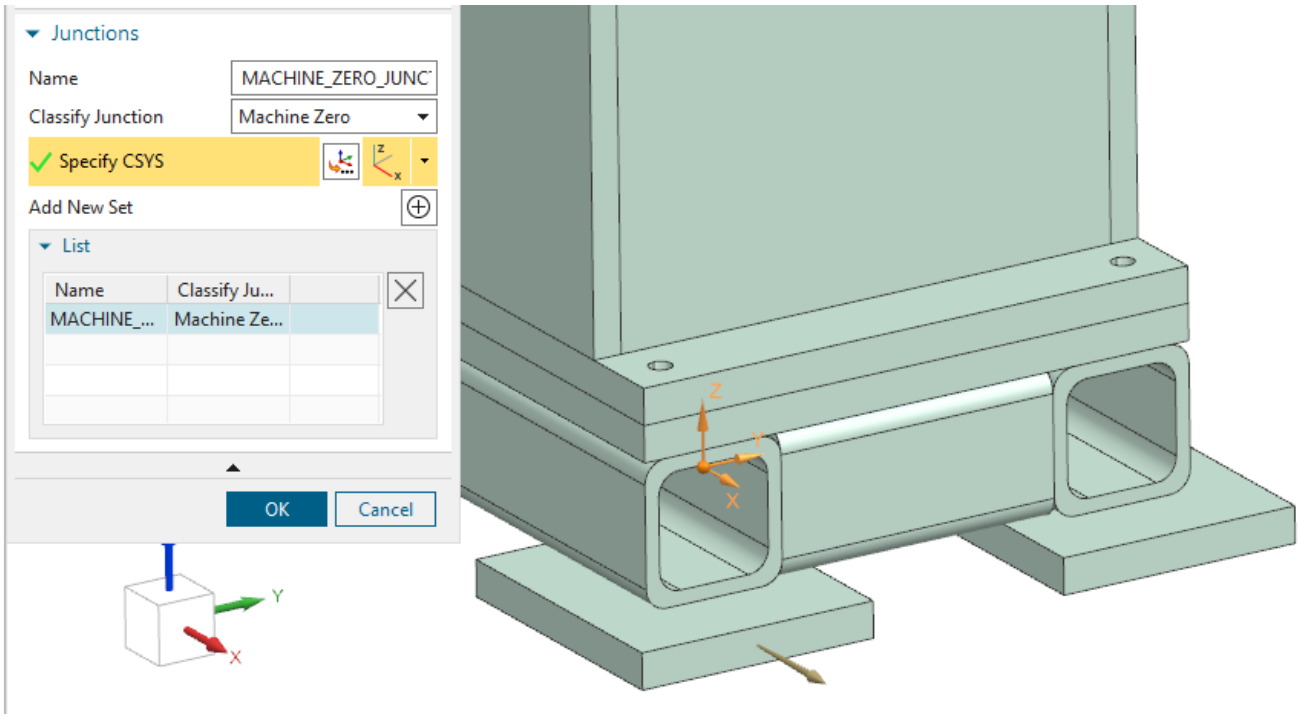

ROBOT BASE (No geometry defined)

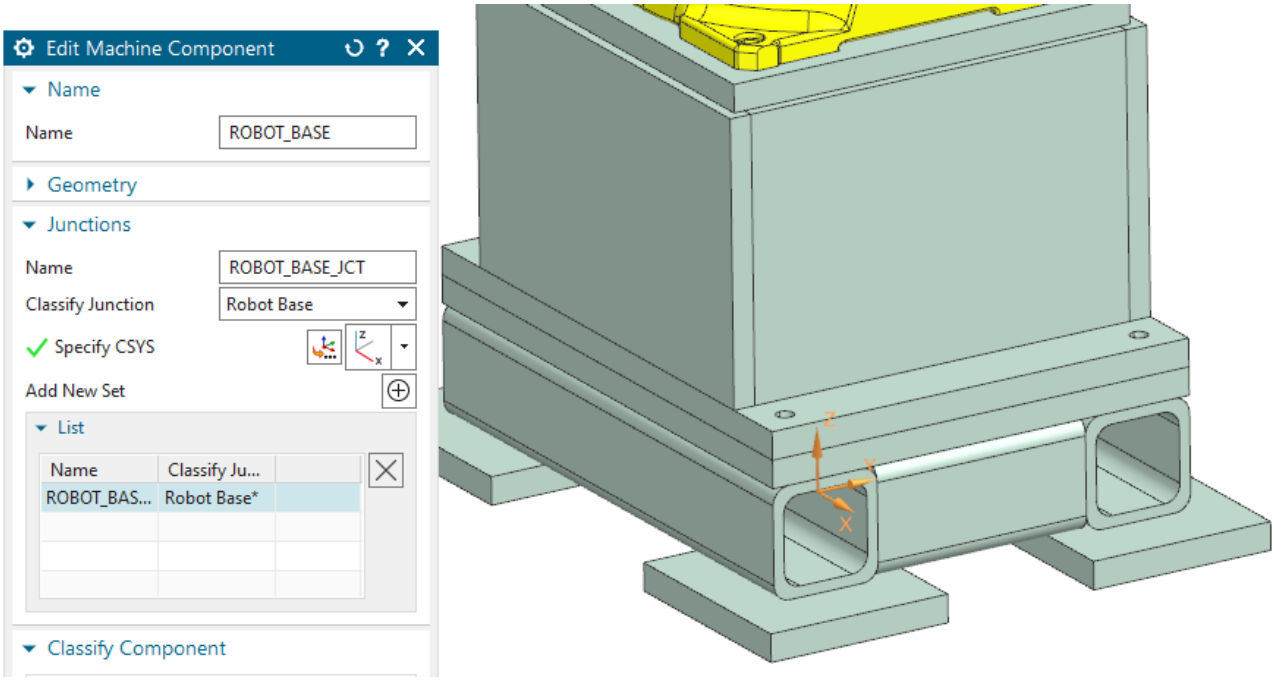

J1

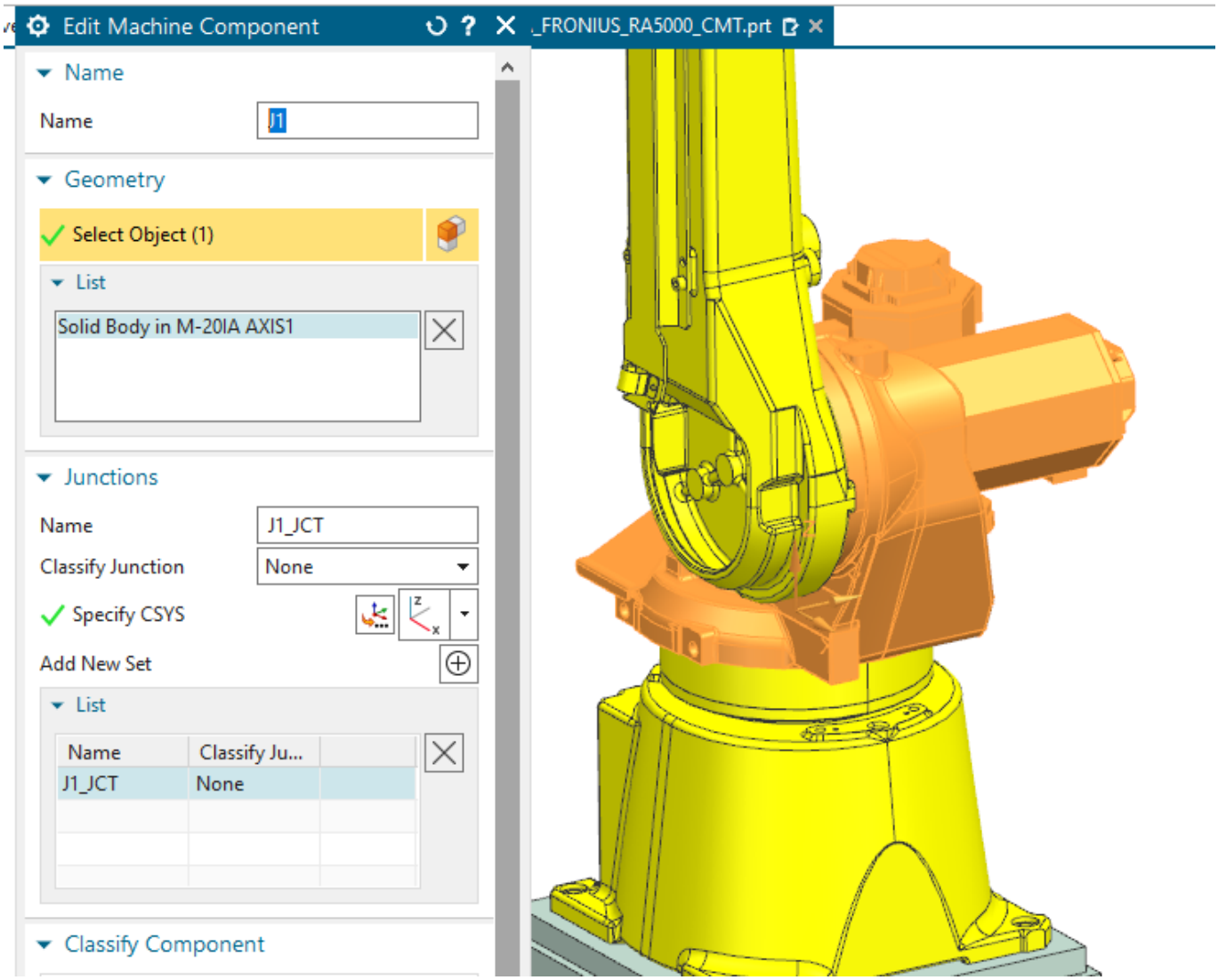

the junction must also be labeled as "J1_JCT".

In the process of defining the CSYS for the J1, J2, J3, J4, J5, and J6 axes, it is necessary to designate the rotation center corresponding to each specific axis.

To facilitate this procedure, certain components can be concealed; in this particular instance, axis1 has been hidden to facilitate the rotation center definition.

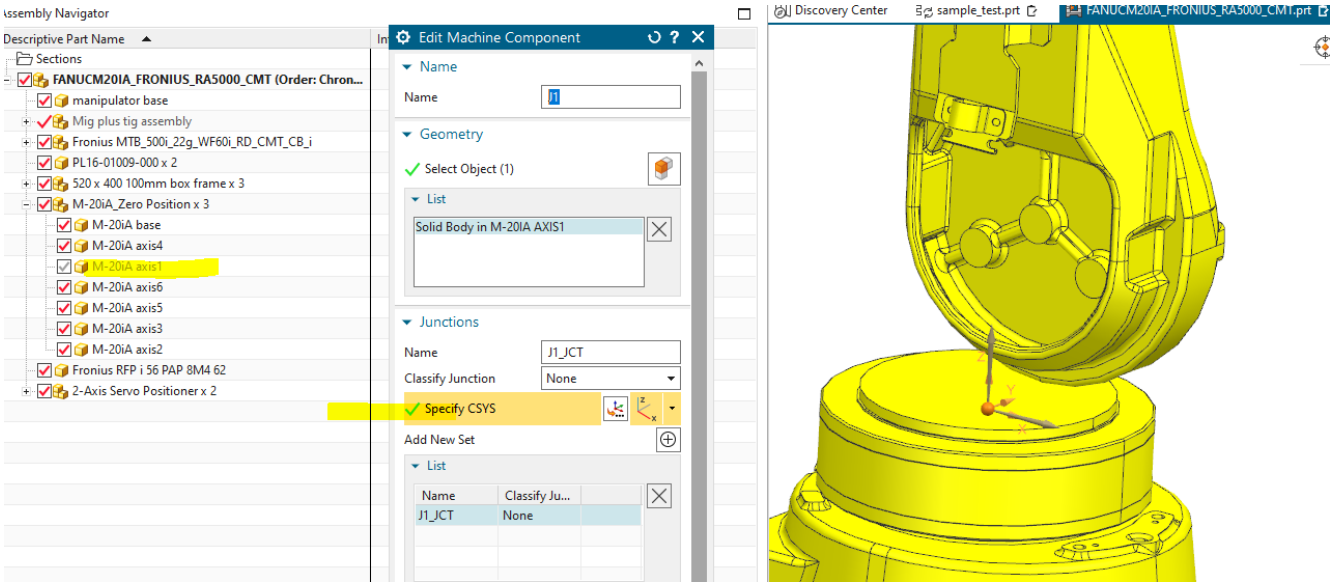

J2

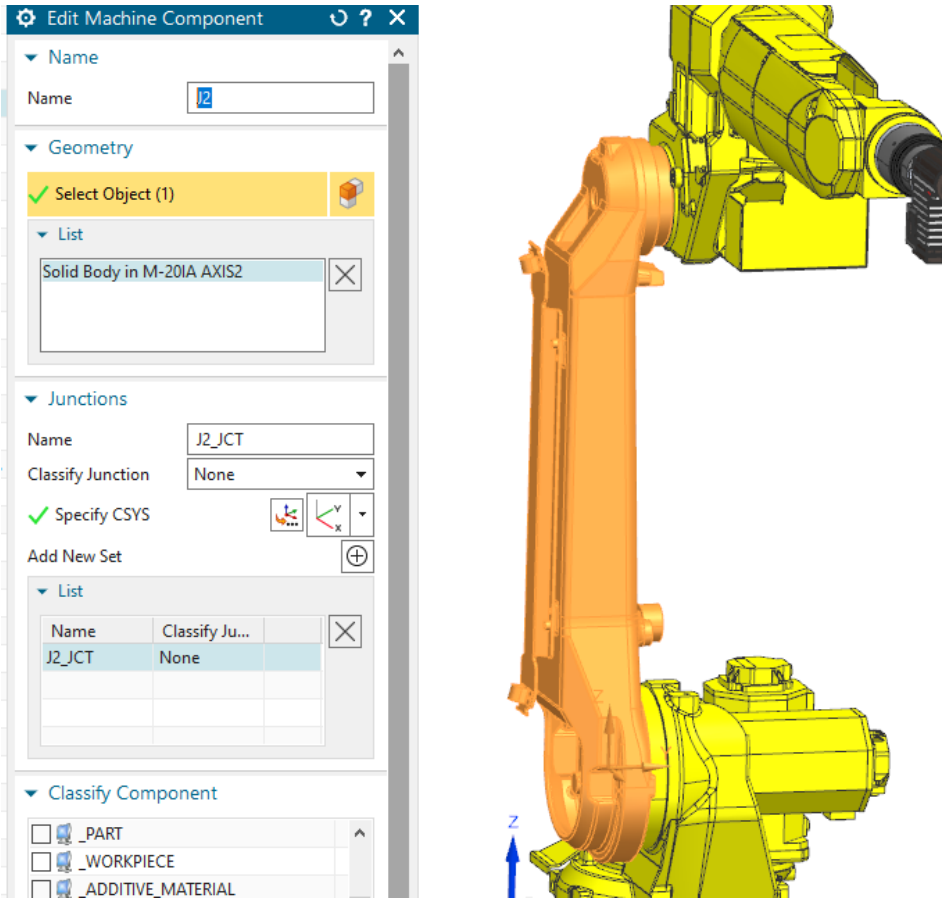

Likewise, the CSYS will be established at the rotational center of J2. It's important to observe that J2 has been temporarily concealed to facilitate the CSYS definition process.

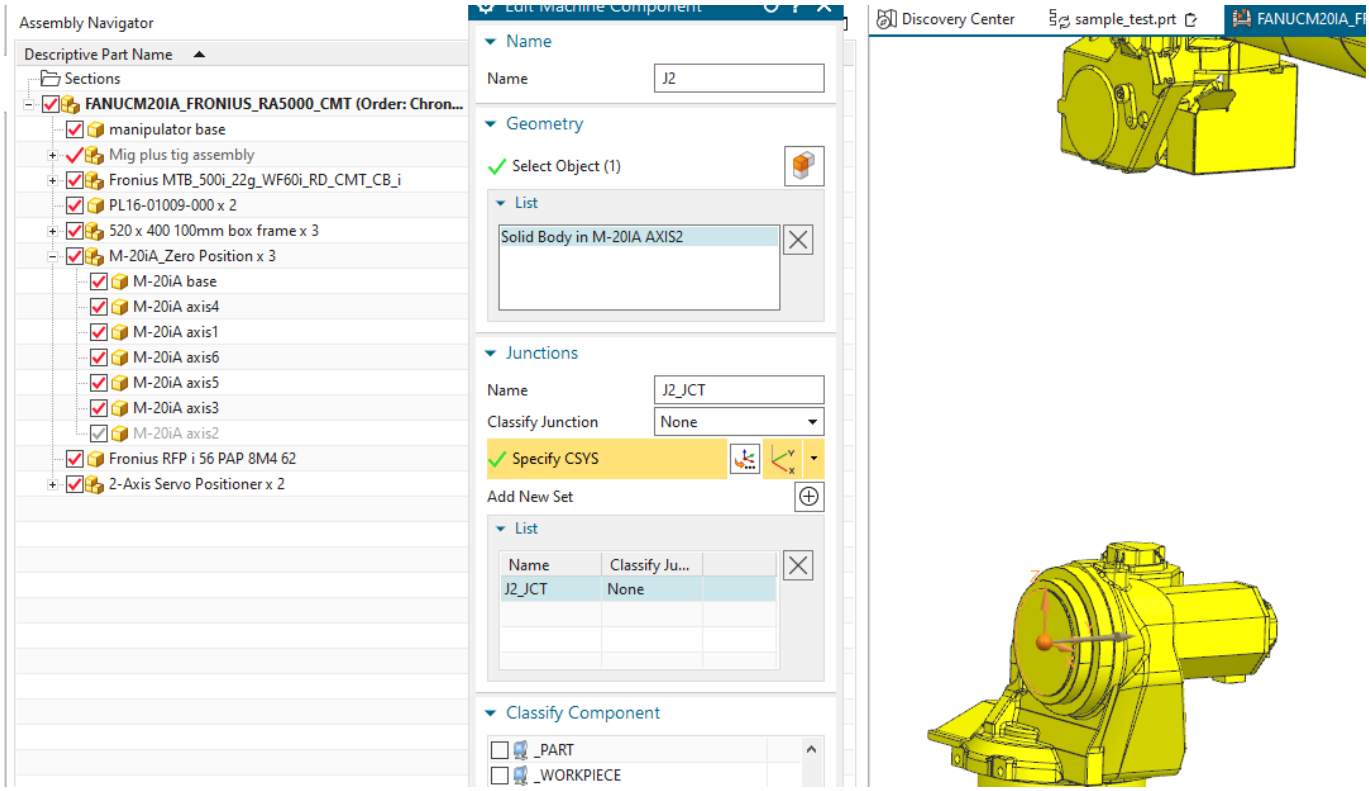

Also the junction must also be labeled as "J2_JCT".

J3

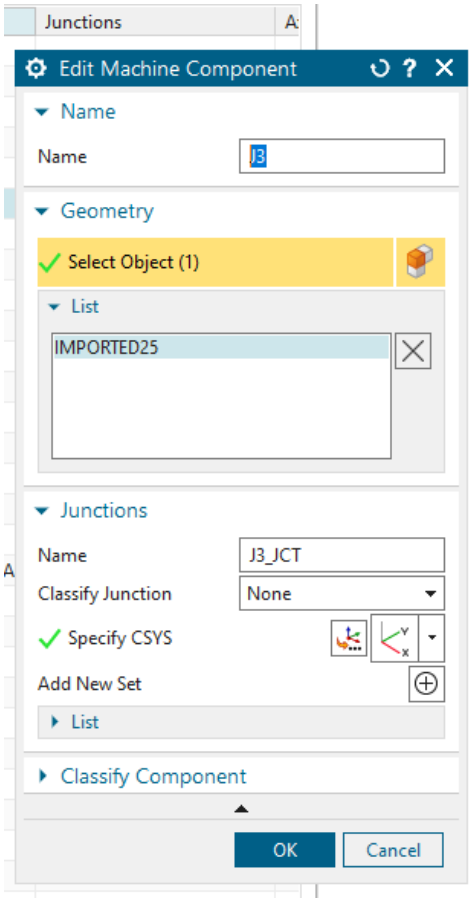
Junctions
Edit Machine Component
Name
Name
J3
Geometry
Select Object (1)
List
IMPORTED25
Junctions
Name
J3_JCT
Classify Junction
None
Specify CSYS
Add New Set
List
Classify Component
OK
Cancel

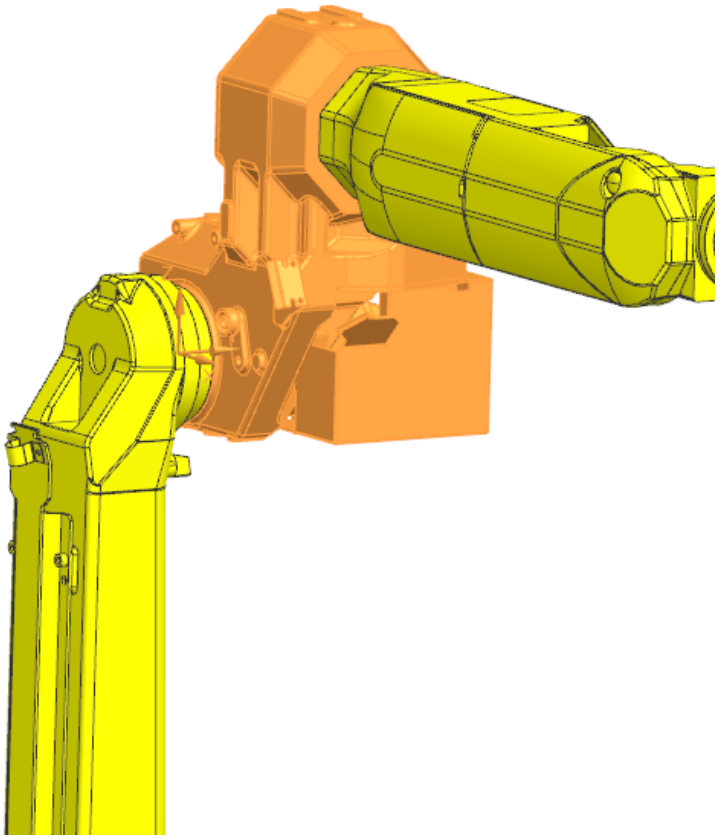

J4

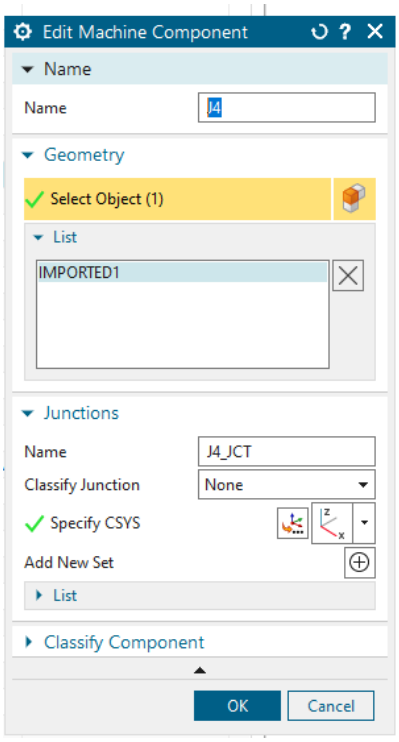
Edit Machine Component
Name
Name
J4
Geometry
Select Object (1)
List
IMPORTED1
Junctions
Name
J4_JCT
Classify Junction
None
Specify CSYS
Add New Set
List
Classify Component
OK
Cancel

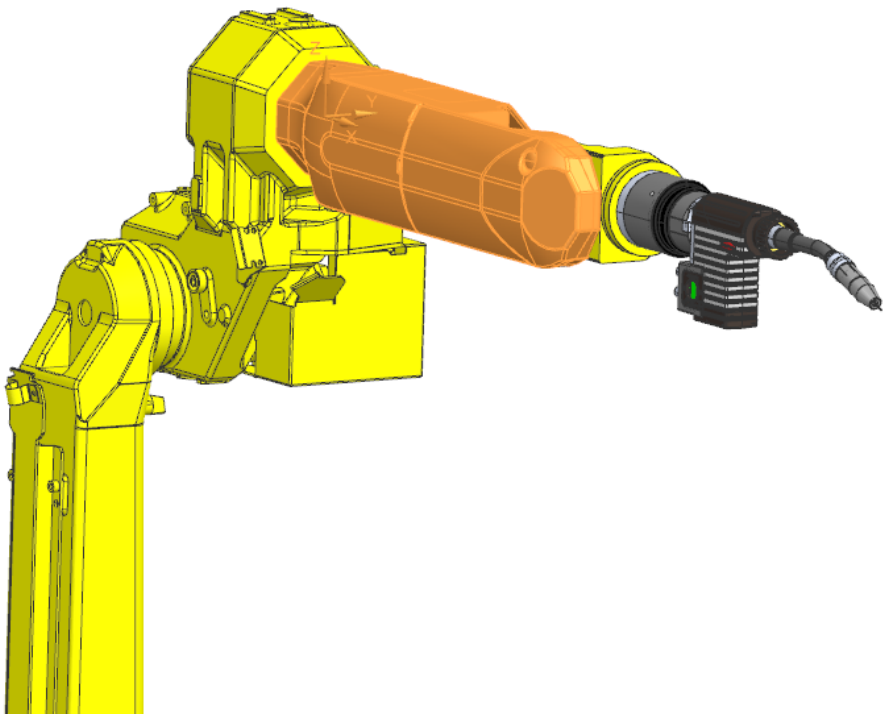

J5

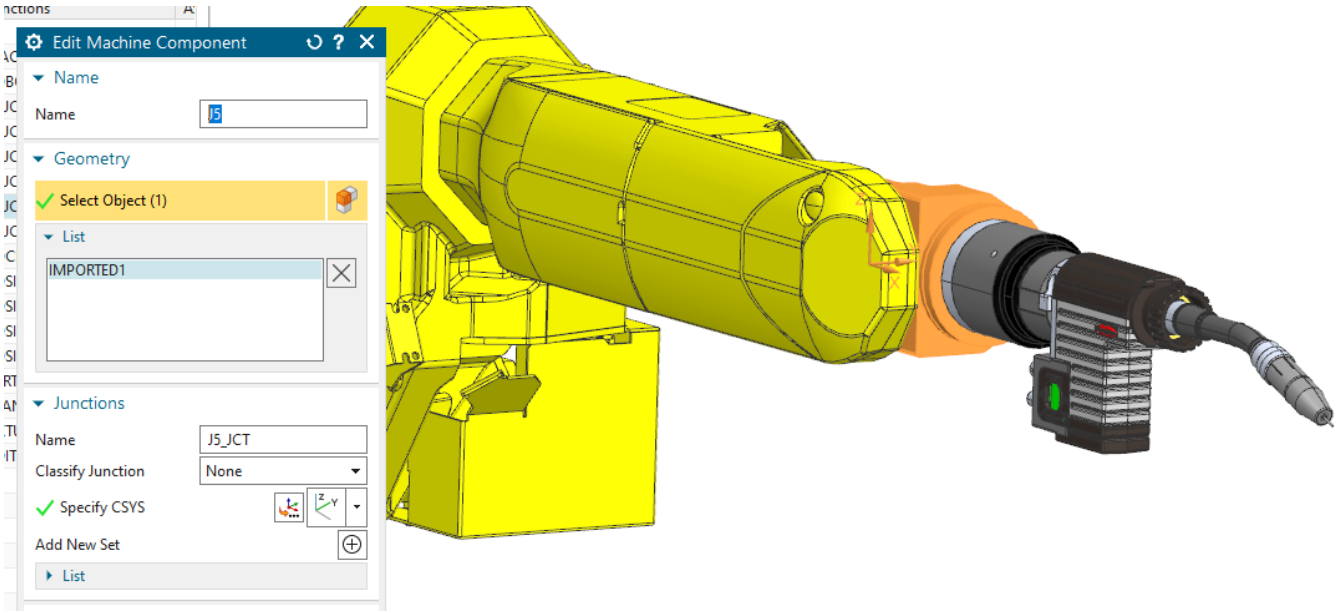
Edit Machine Component
Name
Name
J5
Geometry
Select Object (1)
List
IMPORTED1
Junctions
Name
J5_JCT
Classify Junction
None
Specify CSYS
Add New Set
List

J6

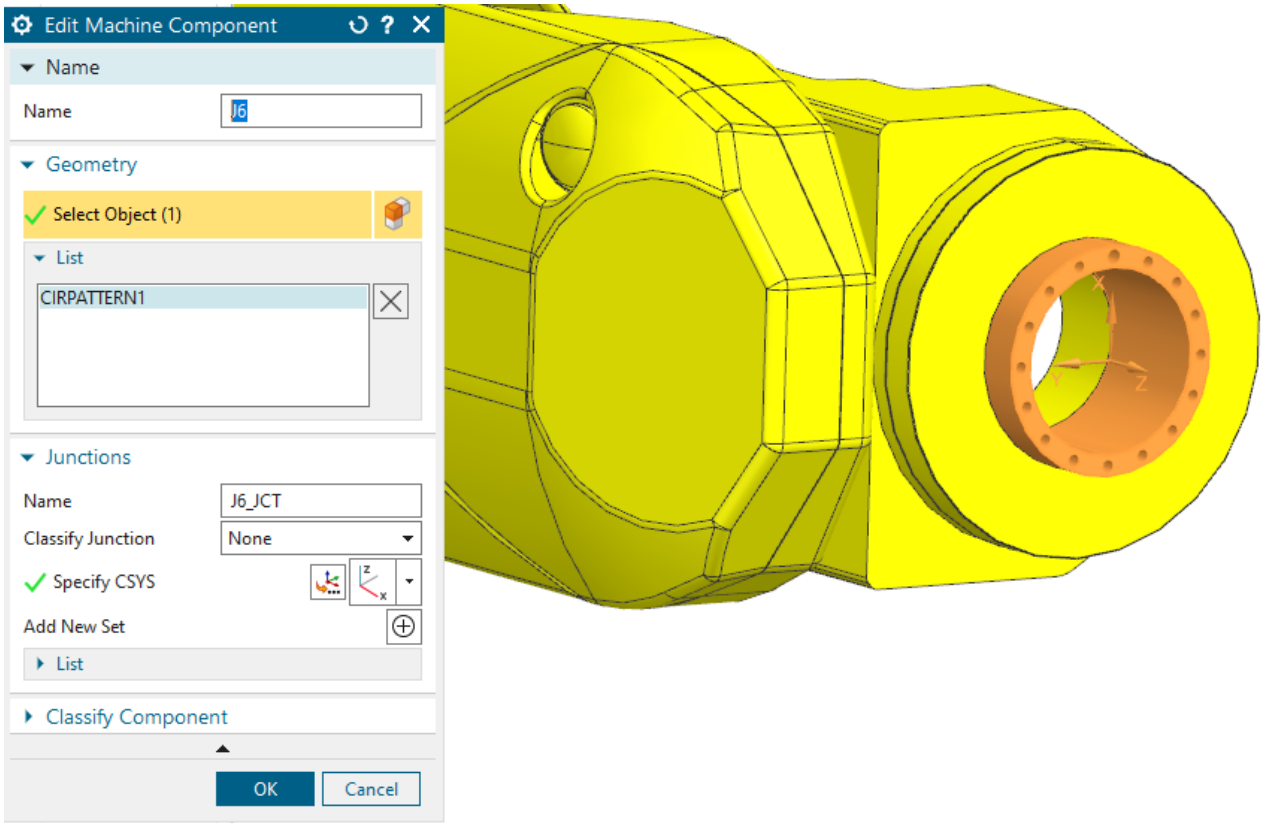
Edit Machine Component
Name
Name
J6
Geometry
Select Object (1)
List
CIRPATTERN1
Junctions
Name
J6_JCT
Classify Junction
None
Specify CSYS
Add New Set
List
Classify Component
OK
Cancel

POCKET

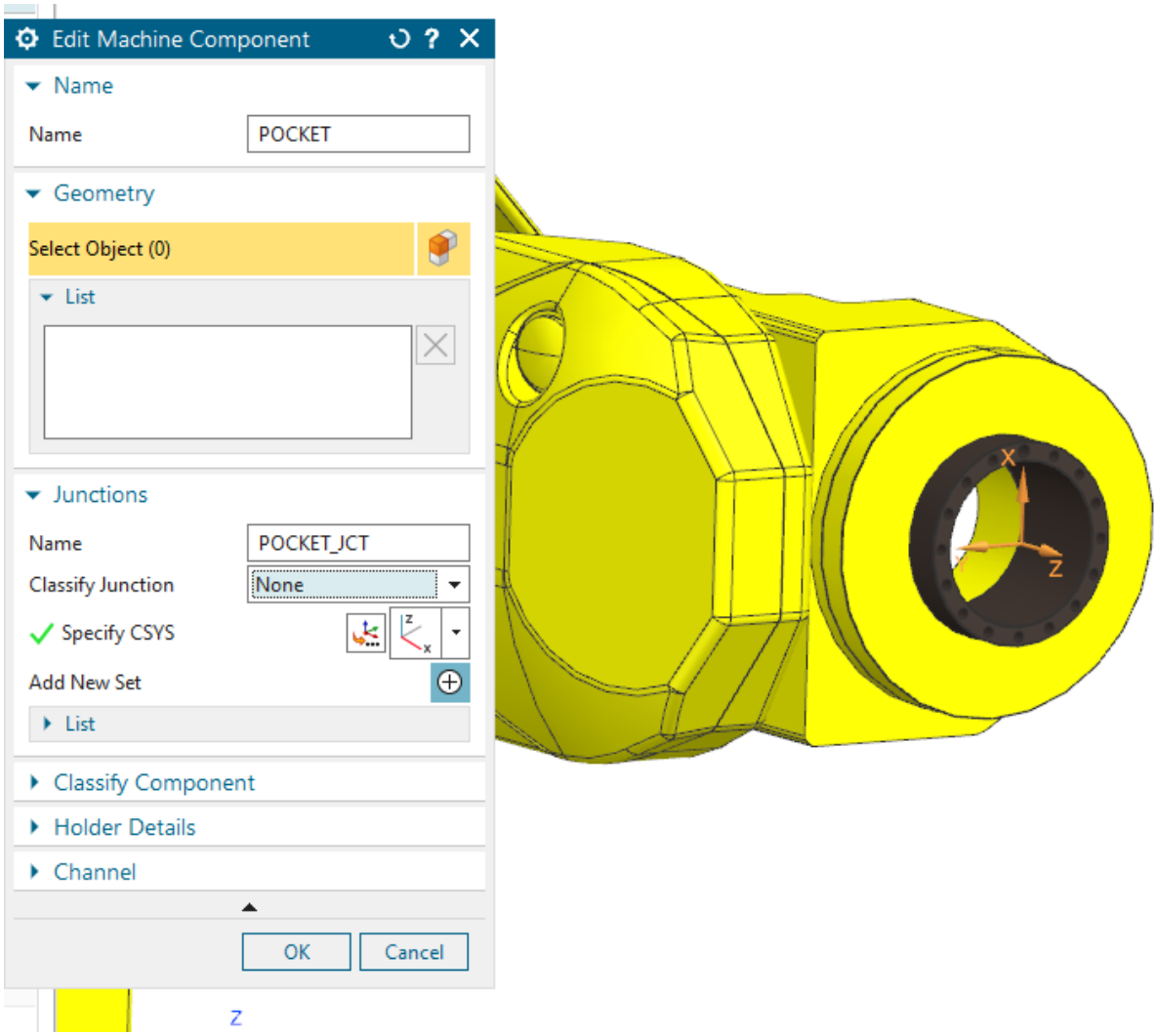
Edit Machine Component
Name
Name
POCKET
Geometry
Select Object (0)
List
Junctions
Name
POCKET_JCT
Classify Junction
None
Specify CSYS
Add New Set
List
Classify Component
Holder Details
Channel
OK
Cancel
X
Z

POSITONER BASE

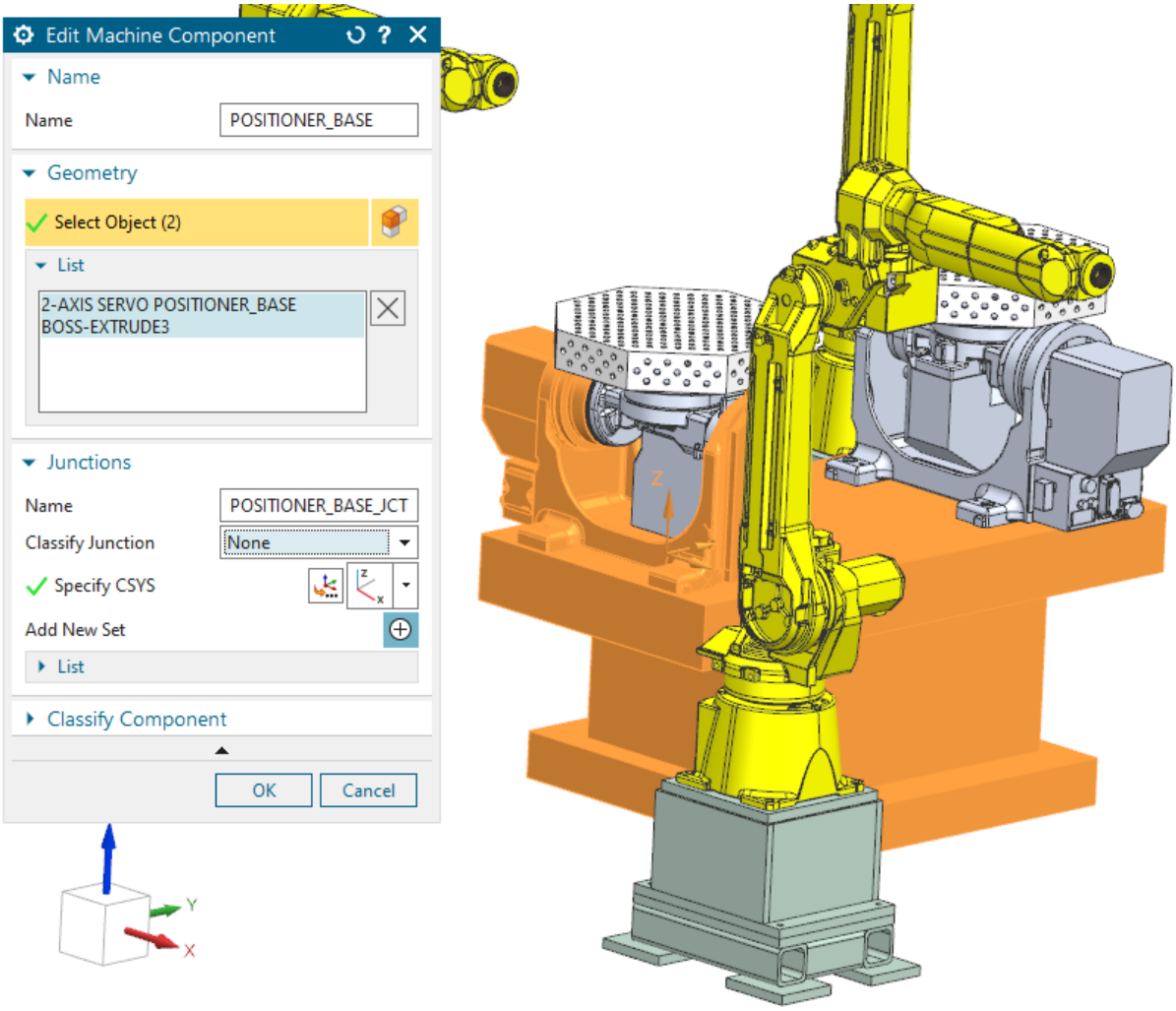

POSITIONER_A1_AXIS

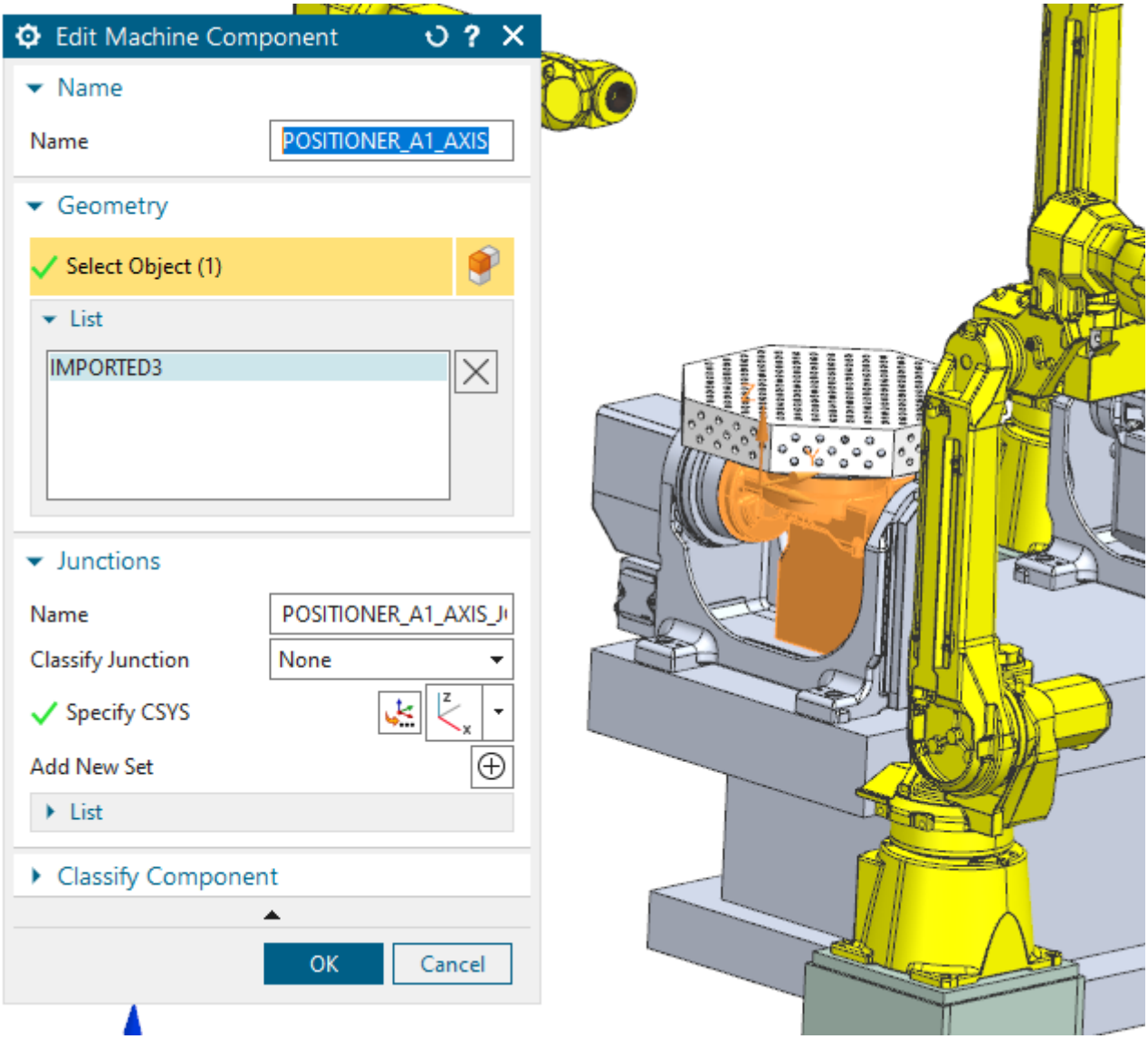

POSITIONER_A2_AXIS

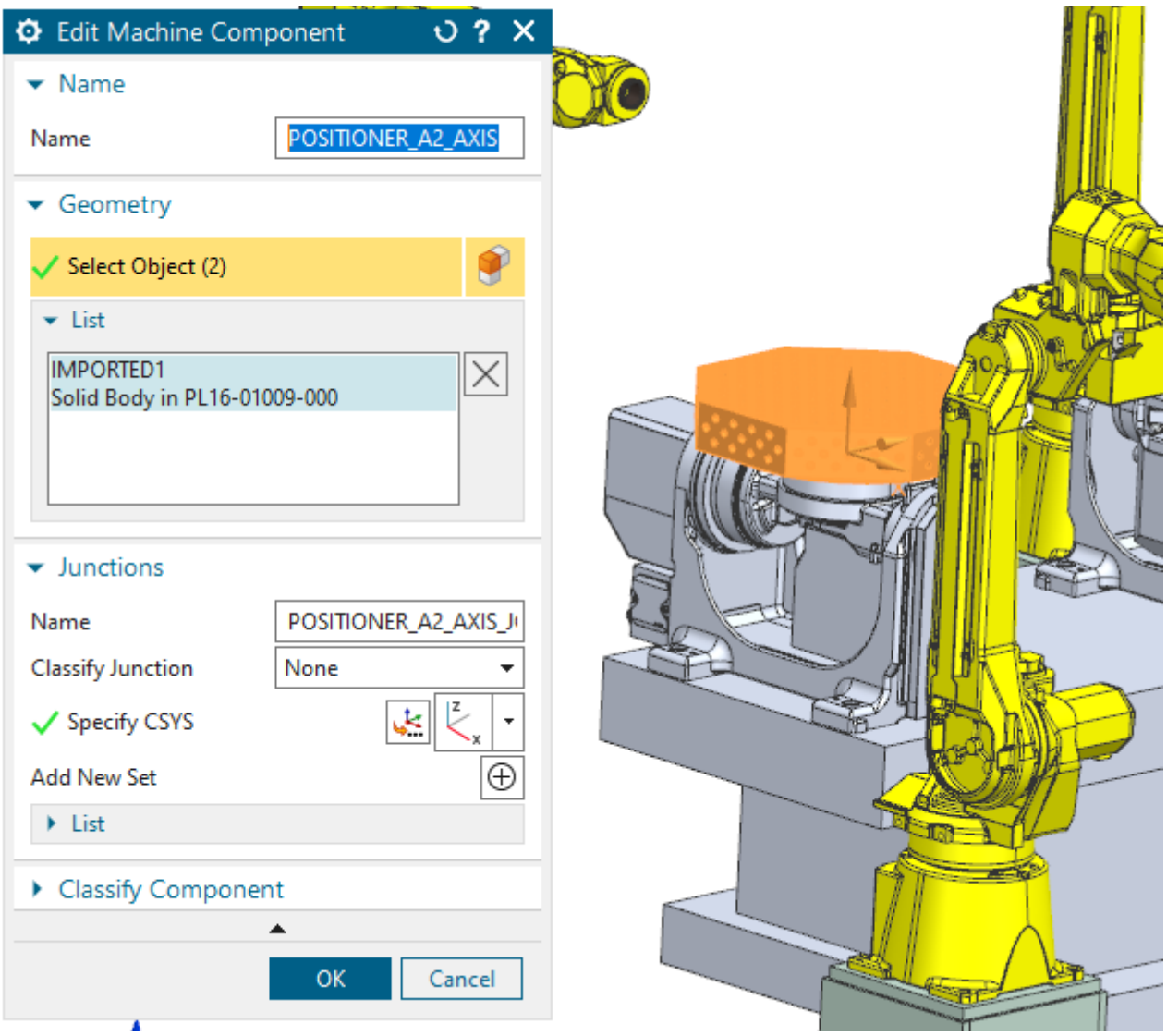

POSITIONER_TOOL

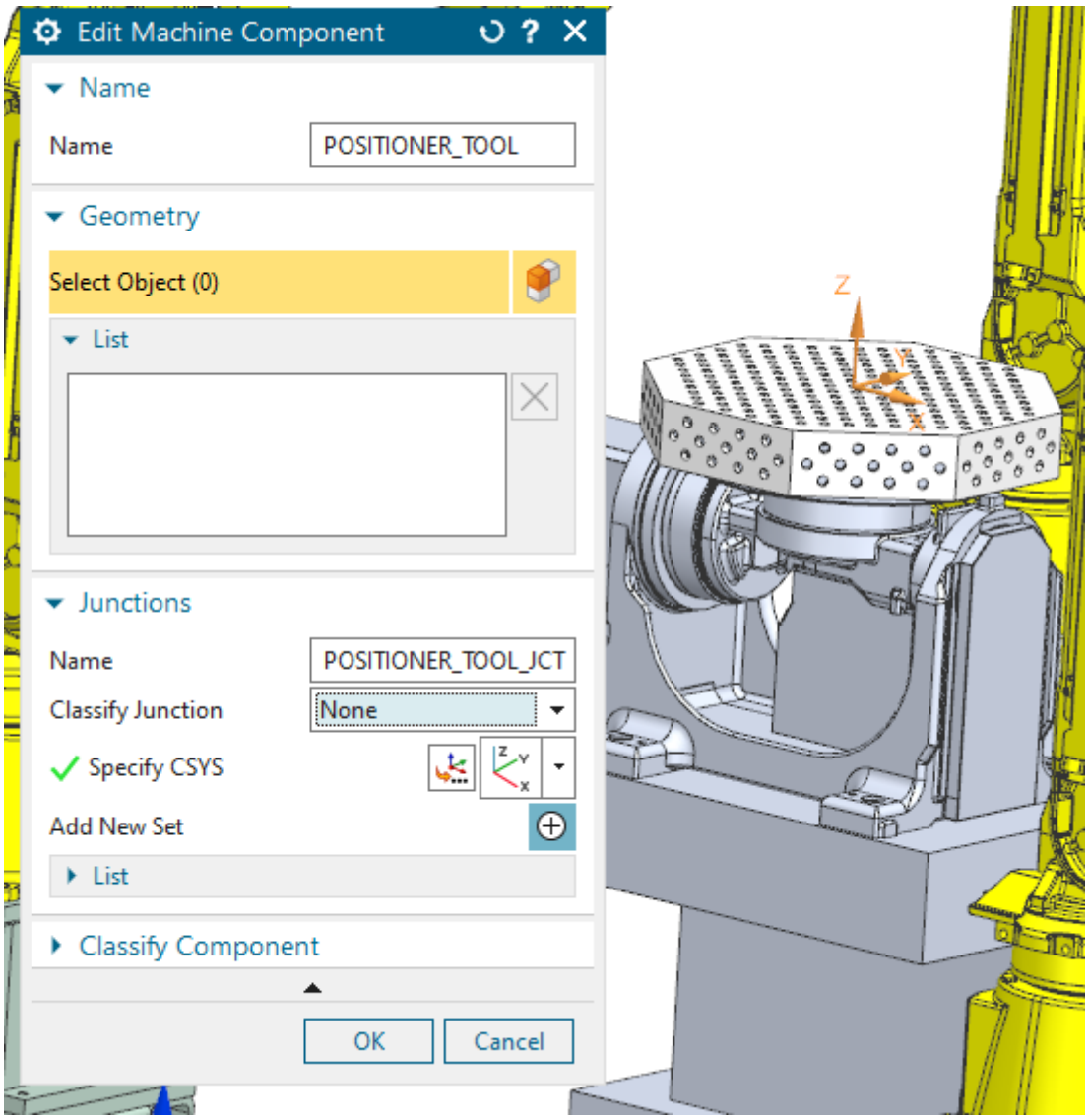

PART

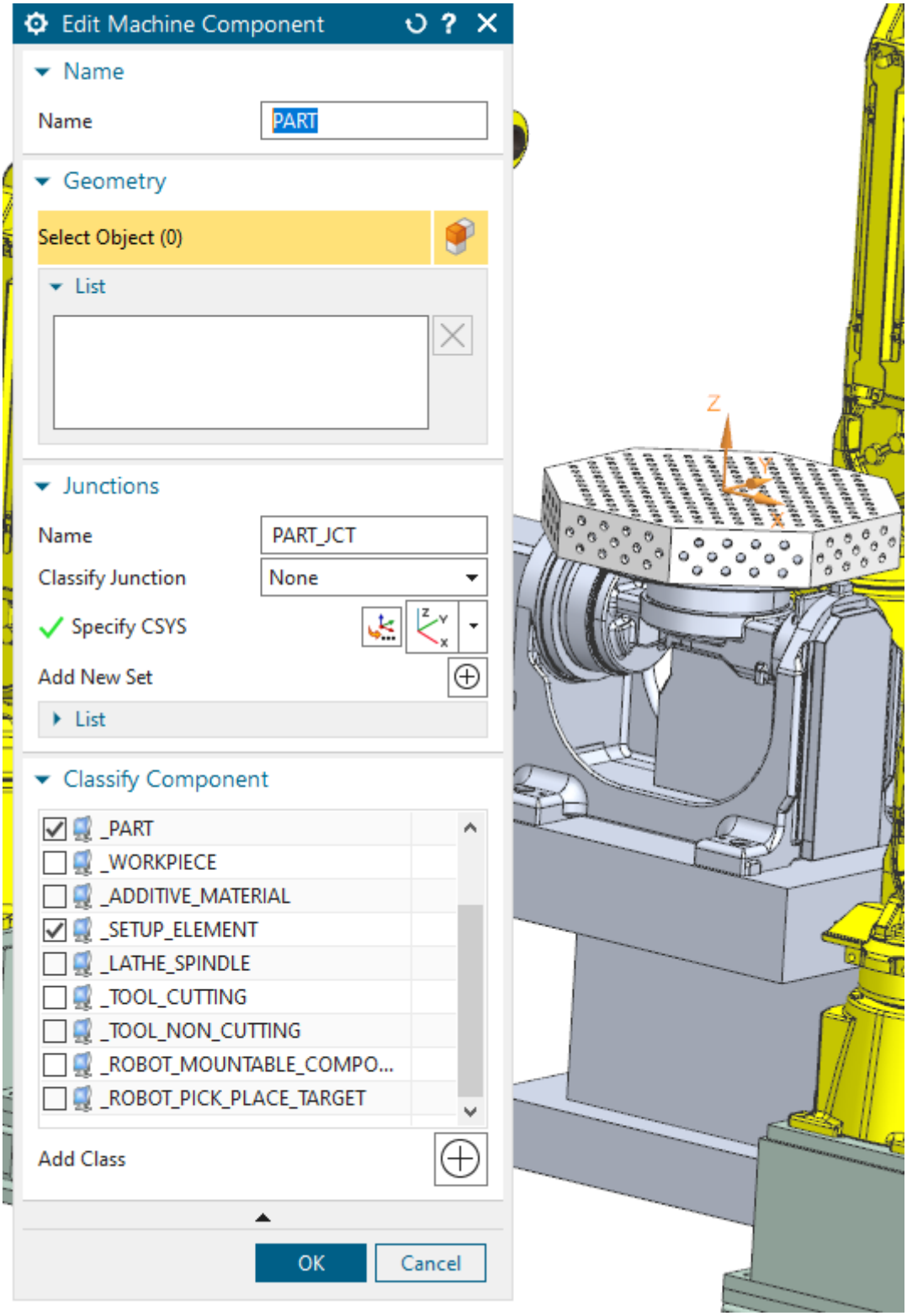
Edit Machine Component
Name
Name
PART
Geometry
Select Object (0)
List
Junctions
Name
PART_JCT
Classify Junction
None
Specify CSYS
Add New Set
List
Classify Component
_PART
_WORKPIECE
_ADDITIVE_MATERIAL
_SETUP_ELEMENT
_LATHE_SPINDLE
_TOOL_CUTTING
_TOOL_NON_CUTTING
_ROBOT_MOUNTABLE_COMPO...
_ROBOT_PICK_PLACE_TARGET
Add Class
OK
Cancel
Z

BLANK

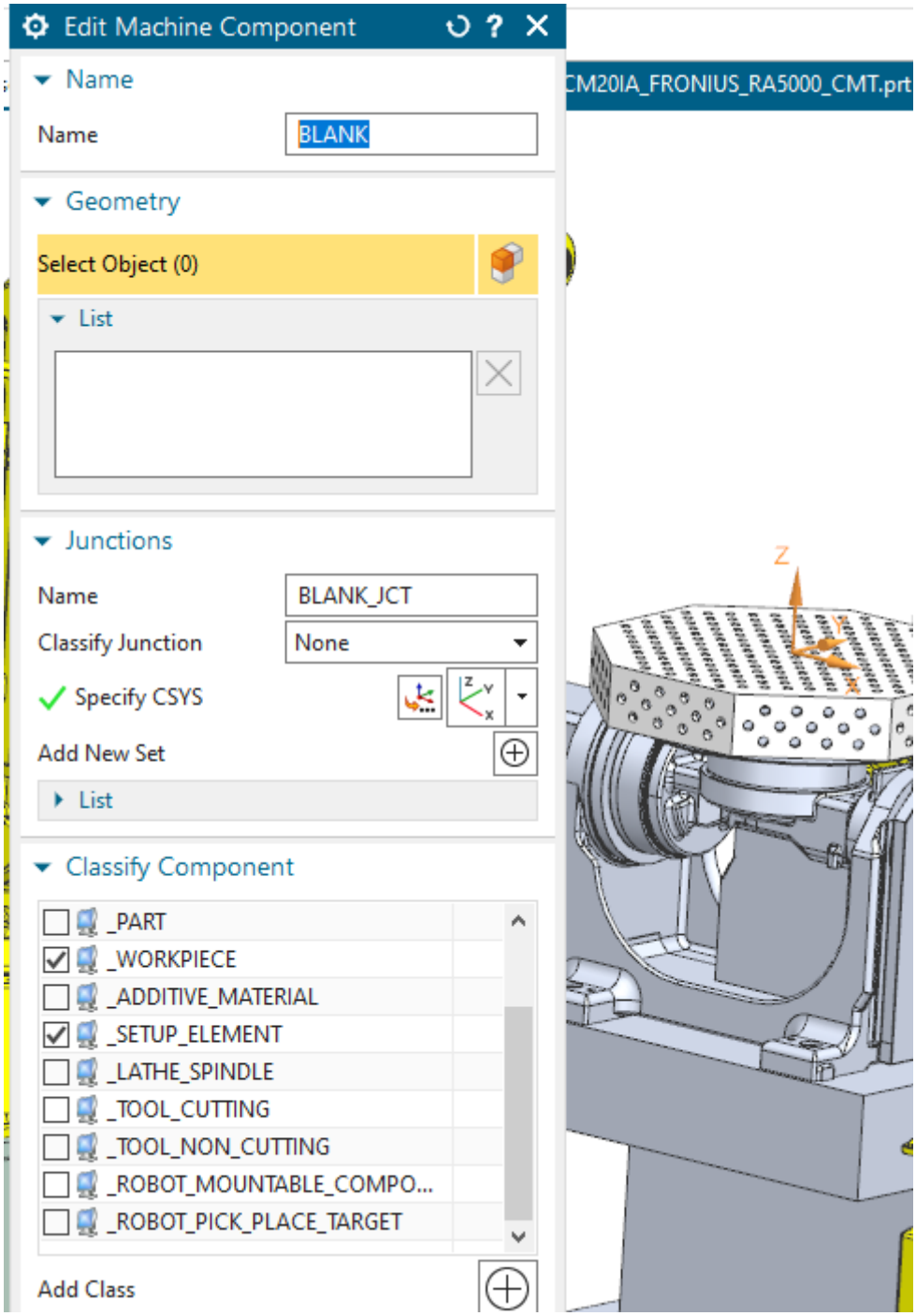
Edit Machine Component
Name
Name
BLANK
Geometry
Select Object (0)
List
Junctions
Name
BLANK_JCT
Classify Junction
None
Specify CSYS
Add New Set
List
Classify Component
_PART
_WORKPIECE
_ADDITIVE_MATERIAL
_SETUP_ELEMENT
_LATHE_SPINDLE
_TOOL_CUTTING
_TOOL_NON_CUTTING
_ROBOT_MOUNTABLE_COMPO...
_ROBOT_PICK_PLACE_TARGET
Add Class
CM20IA_FRONIUS_RA5000_CMT.prt

FIXTURE

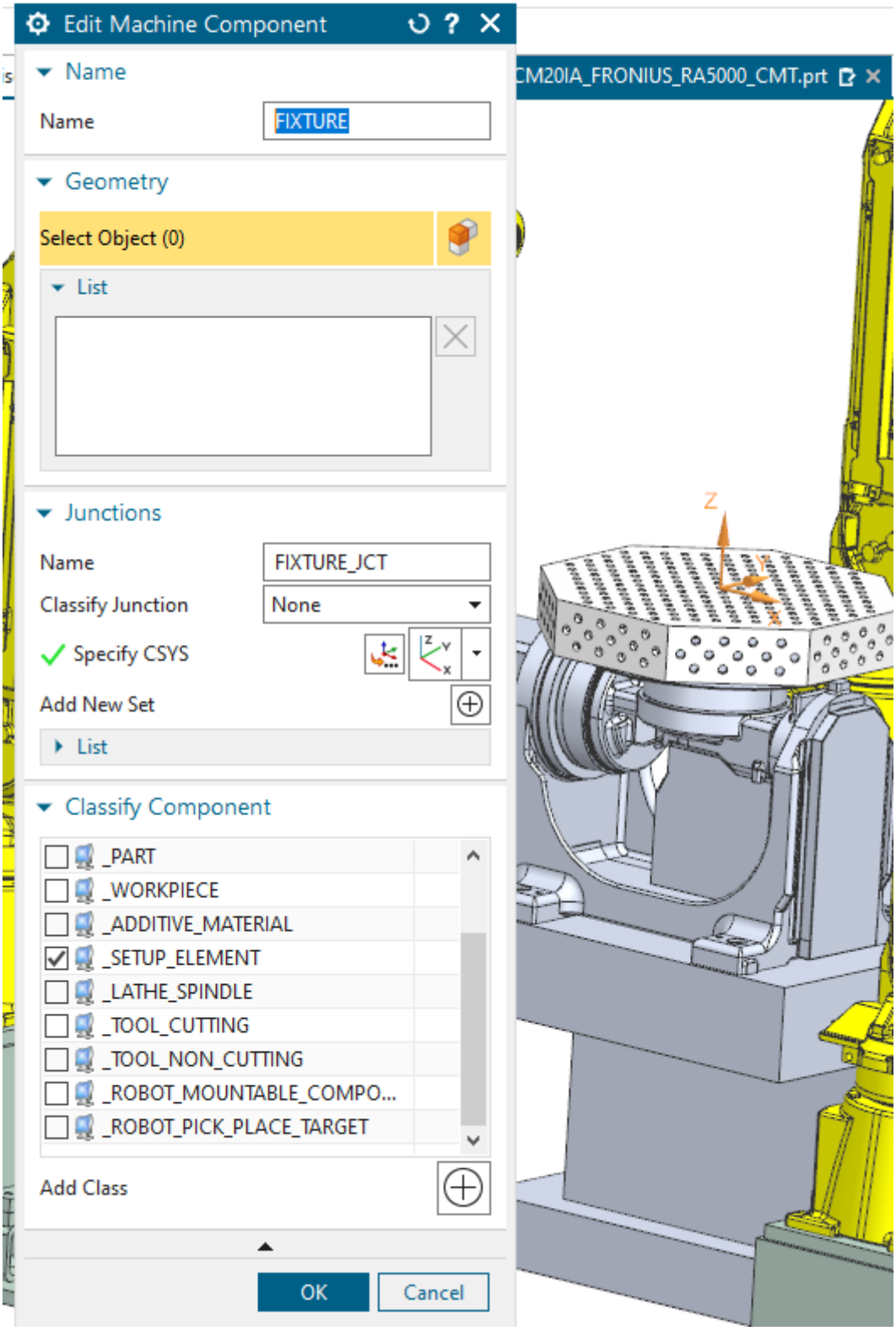
Edit Machine Component
Name
Name
FIXTURE
Geometry
Select Object (0)
List
Junctions
Name
FIXTURE_JCT
Classify Junction
None
Specify CSYS
Add New Set
List
Classify Component
_PART
_WORKPIECE
_ADDITIVE_MATERIAL
_SETUP_ELEMENT
_LATHE_SPINDLE
_TOOL_CUTTING
_TOOL_NON_CUTTING
_ROBOT_MOUNTABLE_COMPO...
_ROBOT_PICK_PLACE_TARGET
Add Class
OK
Cancel
CM20IA_FRONIUS_RA5000_CMT.prt
Z

ADDITIVE_MATERIAL

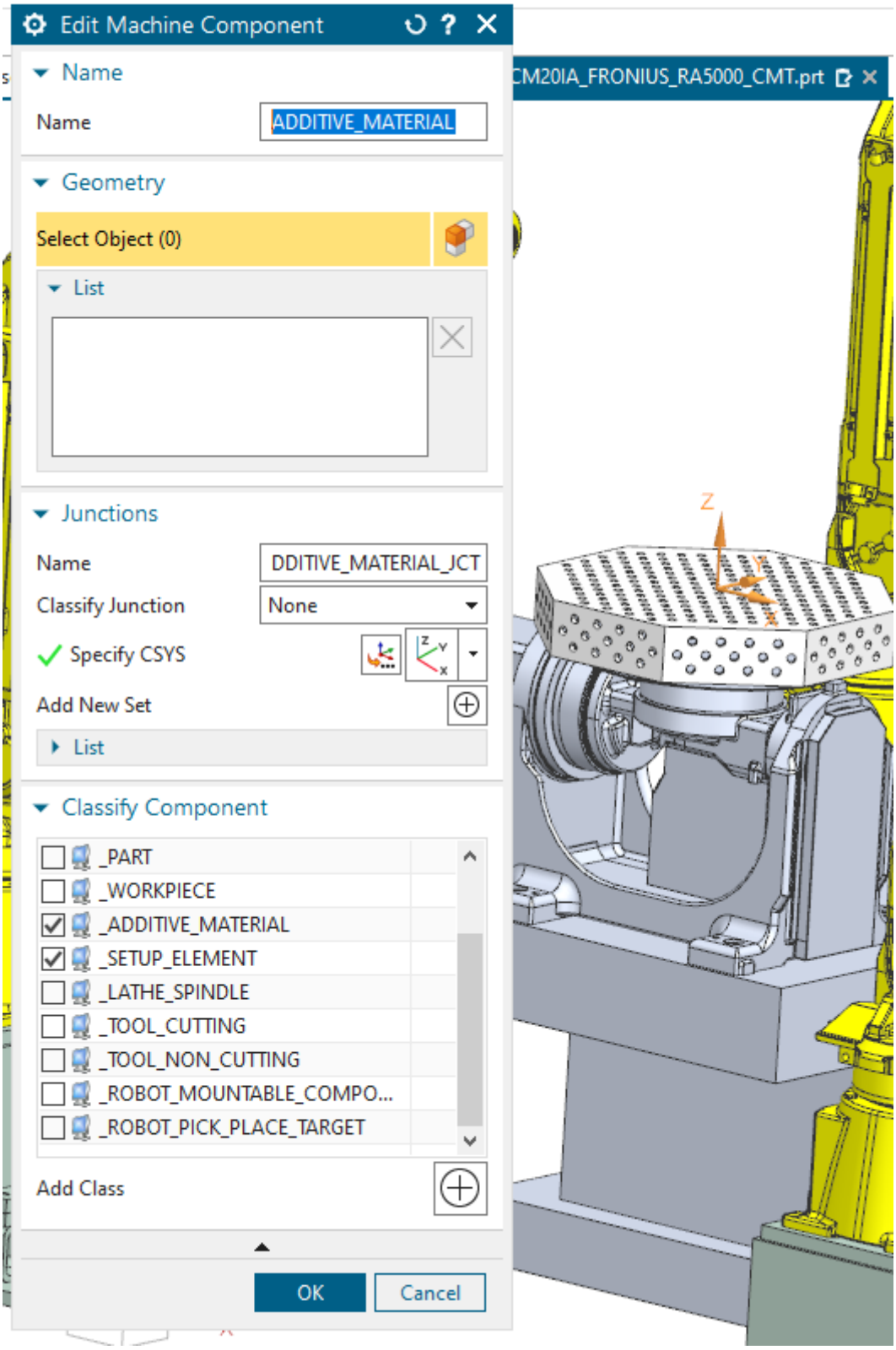

In this section, we will discuss the process of setting axis values for the main structure and defining their respective limits.

Axis Creation and Limit Definition: With the main structure established and geometries defined, the next step involves creating the individual axes and establishing their limits. This process is guided by the comprehensive manuals provided by Mugove Rutsito. These manuals contain axis values and limits.

Machine Tool Navigator - Machine Tool Builder

Name	Classification
FANUCM20IA_FRONIUS_RA5000_CMT	
MACHINE_BASE	_MACHINE_BASE
ROBOT_BASE	
J1	
J2	
J3	
J4	
J5	
J6	
POCKET	_DYNAMIC_HOLDER
POSITIONER_BASE	
POSITIONER_A1_AXIS	
POSITIONER_A2_AXIS	
POSITIONER_TOOL	
PART	_PART, _SETUP_ELEMENT
BLANK	_WORKPIECE, _SETUP_ELEMENT
FIXTURE	_SETUP_ELEMENT
ADDITIVE_MATERIAL	_SETUP_ELEMENT, _ADDITIVE_MA...

Defining Axes and Limits

As part of the configuration process, we will define the axes and their respective limits for the following components:

1. J1 - Joint 1: The first rotational joint will be configured with its corresponding limits to ensure safe and efficient movement.
2. J2 - Joint 2: Similar to J1, the second rotational joint will have defined limits for controlled motion.
3. J3 - Joint 3: The third rotational joint's axis values and limits will be set to align with system requirements.
4. J4 - Joint 4: For the fourth rotational joint, we will establish precise axis values and operational boundaries.
5. J5 - Joint 5: Axis values and limits for the fifth rotational joint will be defined for accurate positioning.
6. J6 - Joint 6: Similar to the previous joints, the sixth rotational joint will be configured with its axis values and limits.
7. Positioner A1: The first positioner's axis and limits will be defined to ensure optimal positioning capabilities.
8. Positioner A2: Similarly, the second positioner's axis values and limits will be established for accurate positioning.

To obtain accurate and up-to-date axis limit information, we will refer to the manuals received from Mugove Rutsito located in the following directory:

Path: E:\Kaizen PLM Dropbox\Jobs, Subscriptions, IR's, Customer Notes\Jobs_Renewals\2022\J22182 - MTC-Robotic AM\10. All Project files\Customer Files_Models and programs\Manuals

Also the direction of the axes should be obtained from the manual

Name

2axis_positioner_maintenance_manual_[B-82535EN_01]
AM-120iC_Operator_Manual_[B-82874EN_03]

Procedure Setting up Axis Limits

1 Press MENUS.
2 Select SYSTEM.
3 Press F1, [TYPE].
4 Select Axis Limits. You will see a screen similar to the following.

SYSTEM Axis limits JOINT 1/16

AXIS	GROUP	LOWER	UPPER	
1	1	-180.00	180.00	deg
2	1	-90.00	135.00	deg
3	1	-160.00	280.00	deg
4	1	-360.00	360.00	deg
5	1	-125.00	125.00	deg
6	1	-360.00	360.00	deg
7	1	0.000	0.00	mm
8	1	0.000	0.00	mm
9	1	0.000	0.00	mm

[TYPE]

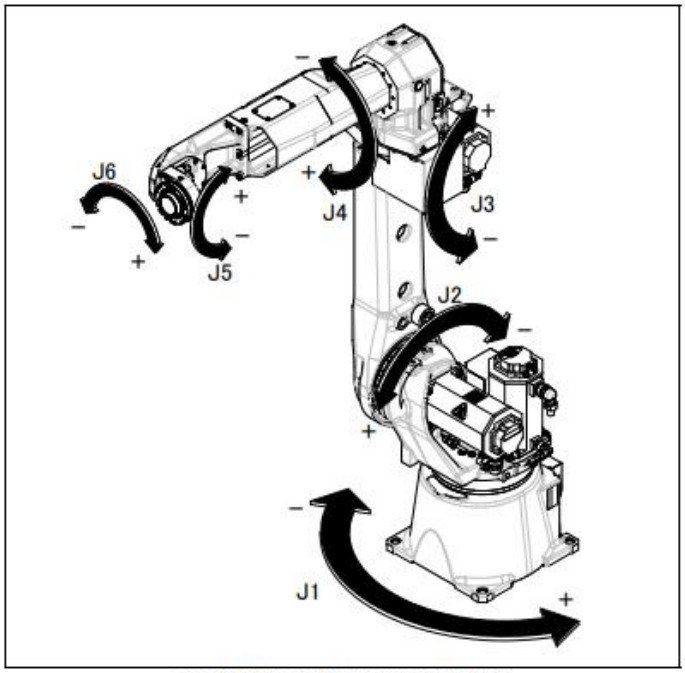

Fig. 3.1 (b) Each axes coordinates

J1

Right click on J1 > Insert > Axis

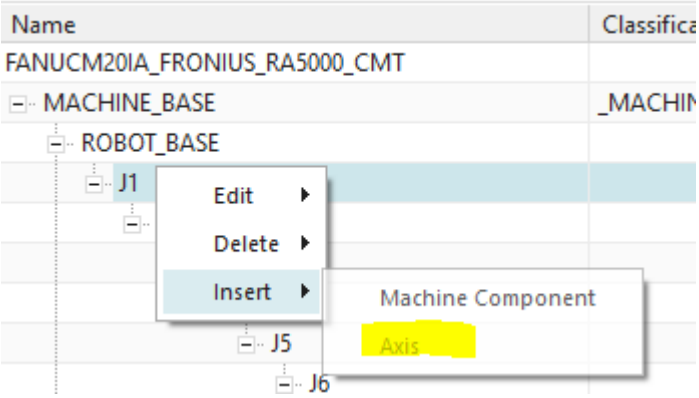
Name
Classifica
FANUCM20IA_FRONIUS_RA5000_CMT
MACHINE_BASE
_MACHIN
ROBOT_BASE
J1
Edit
Delete
Insert
Machine Component
Axis
J5
J6

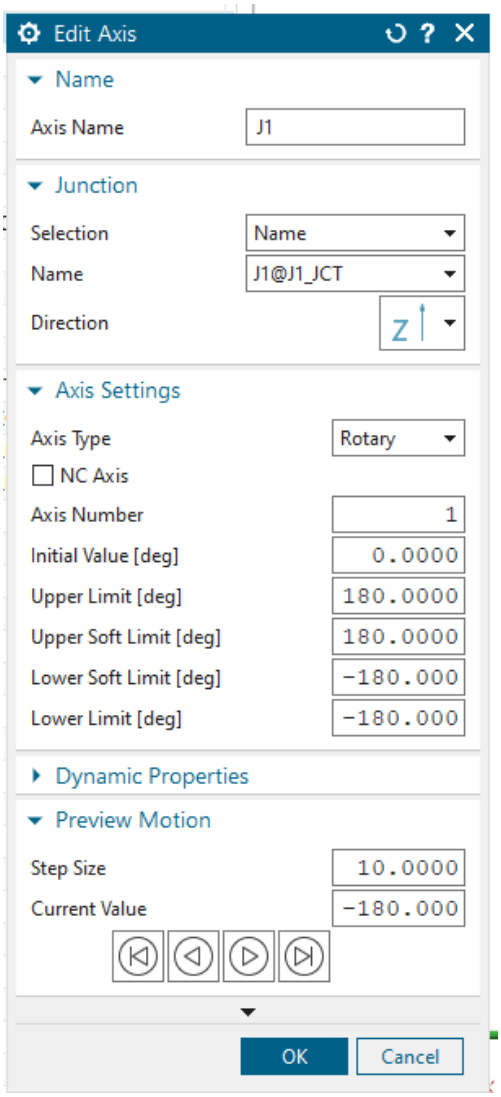
Edit Axis
Name
Axis Name
J1
Junction
Selection
Name
Name
J1@J1_JCT
Direction
Z
Axis Settings
Axis Type
Rotary
NC Axis
Axis Number
1
Initial Value [deg]
0.0000
Upper Limit [deg]
180.0000
Upper Soft Limit [deg]
180.0000
Lower Soft Limit [deg]
-180.000
Lower Limit [deg]
-180.000
Dynamic Properties
Preview Motion
Step Size
10.0000
Current Value
-180.000
OK
Cancel

J2

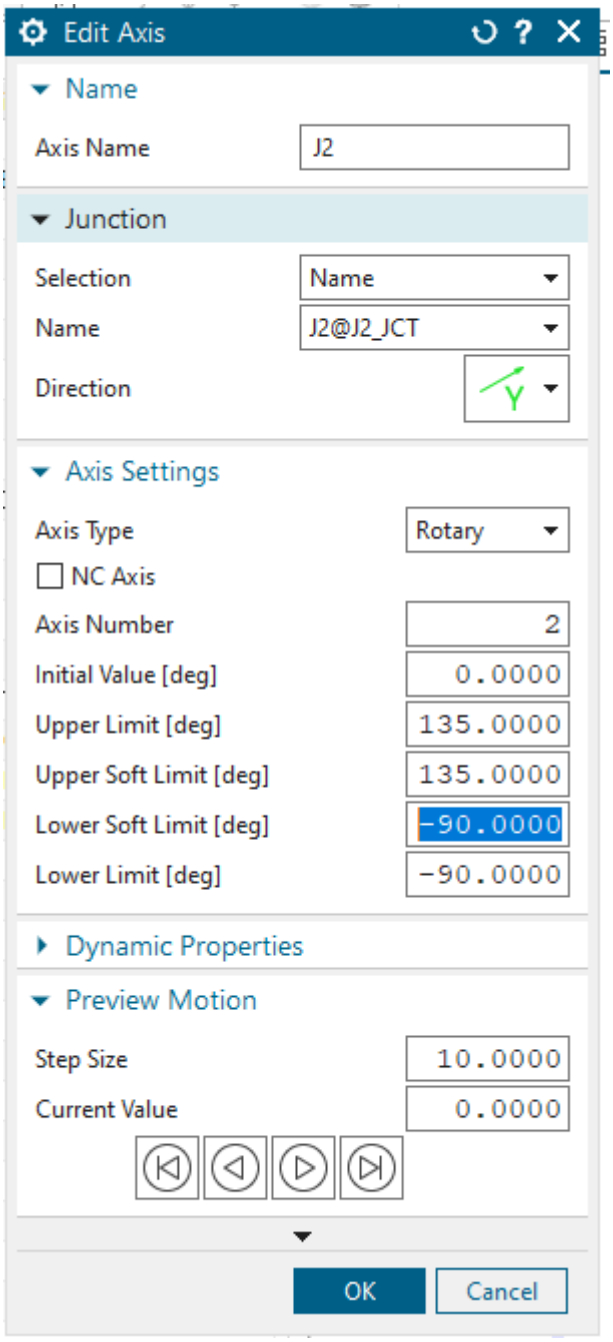
Edit Axis
Name
Axis Name
J2
Junction
Selection
Name
Name
J2@J2_JCT
Direction
Y
Axis Settings
Axis Type
Rotary
NC Axis
Axis Number
2
Initial Value [deg]
0.0000
Upper Limit [deg]
135.0000
Upper Soft Limit [deg]
135.0000
Lower Soft Limit [deg]
-90.0000
Lower Limit [deg]
-90.0000
Dynamic Properties
Preview Motion
Step Size
10.0000
Current Value
0.0000
OK
Cancel

J3

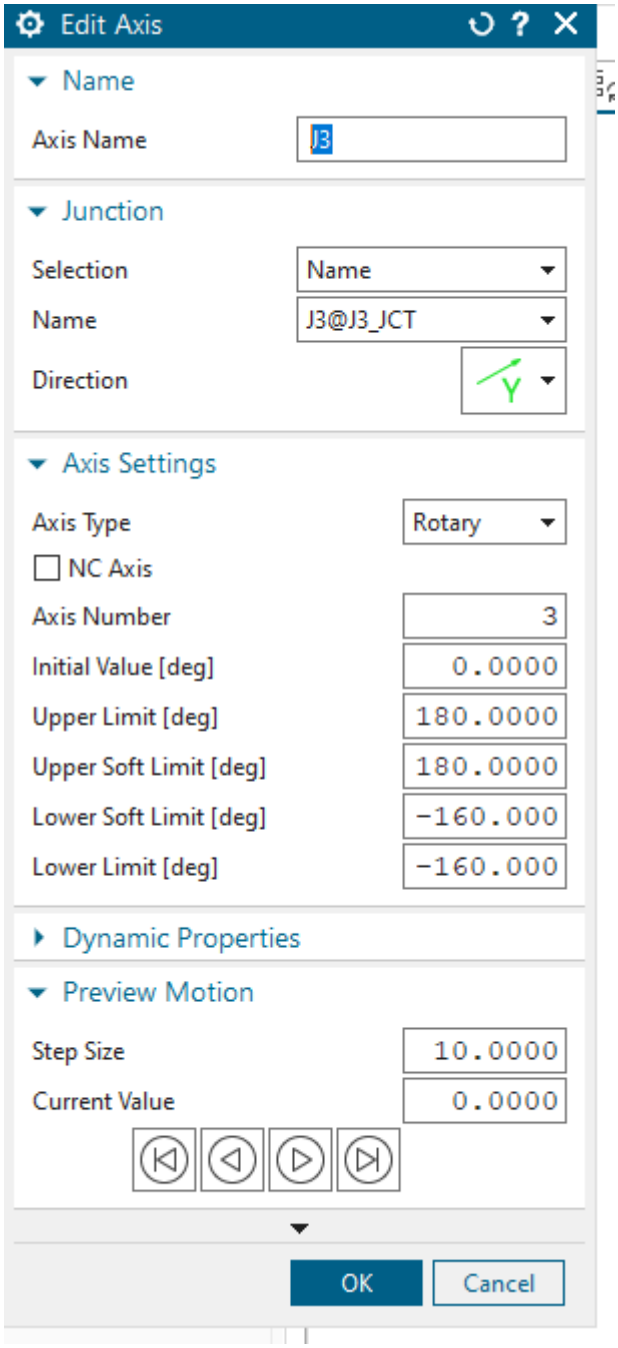
Edit Axis
Name
Axis Name
J3
Junction
Selection
Name
Name
J3@J3_JCT
Direction
Y
Axis Settings
Axis Type
Rotary
NC Axis
Axis Number
3
Initial Value [deg]
0.0000
Upper Limit [deg]
180.0000
Upper Soft Limit [deg]
180.0000
Lower Soft Limit [deg]
-160.000
Lower Limit [deg]
-160.000
Dynamic Properties
Preview Motion
Step Size
10.0000
Current Value
0.0000
OK
Cancel

J4

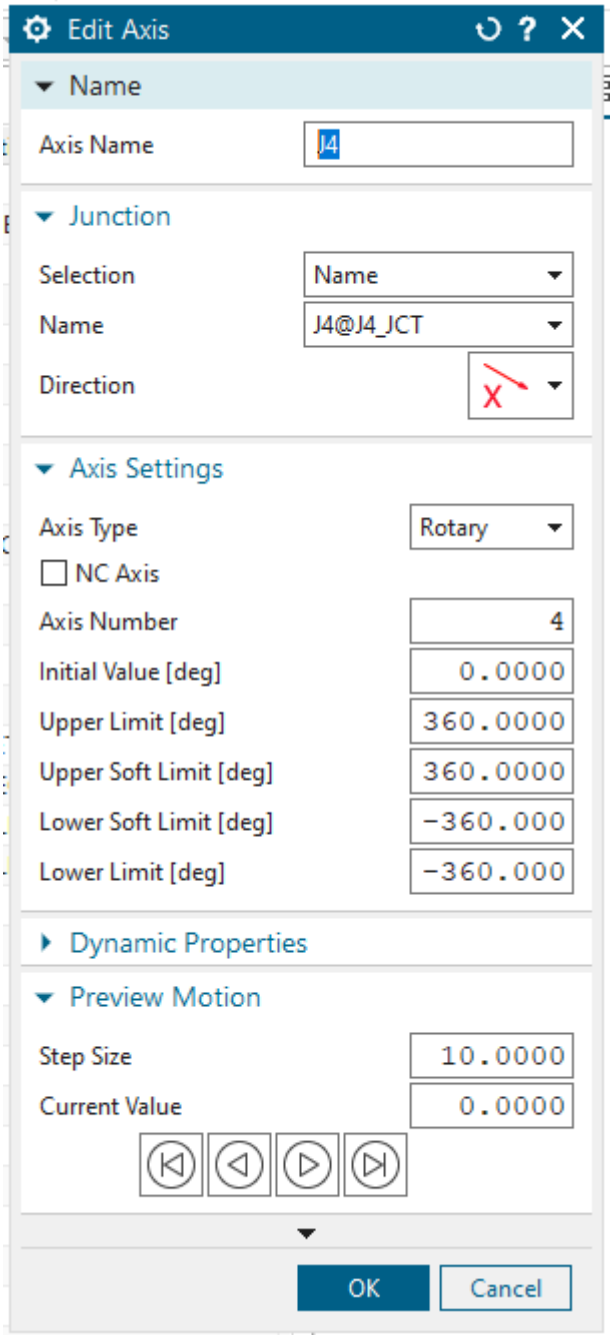
Edit Axis
Name
Axis Name
J4
Junction
Selection
Name
Name
J4@J4_JCT
Direction
X
Axis Settings
Axis Type
Rotary
NC Axis
Axis Number
4
Initial Value [deg]
0.0000
Upper Limit [deg]
360.0000
Upper Soft Limit [deg]
360.0000
Lower Soft Limit [deg]
-360.000
Lower Limit [deg]
-360.000
Dynamic Properties
Preview Motion
Step Size
10.0000
Current Value
0.0000
OK
Cancel

J5

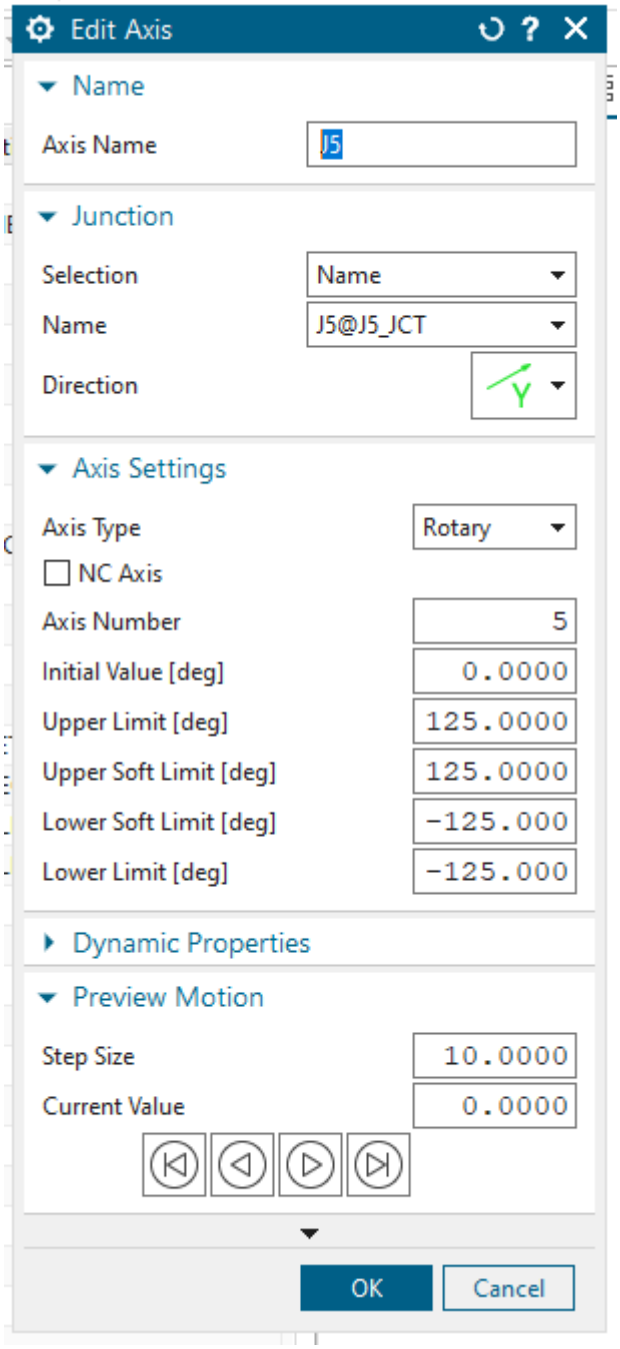
Edit Axis
Name
Axis Name
J5
Junction
Selection
Name
Name
J5@J5_JCT
Direction
Y
Axis Settings
Axis Type
Rotary
NC Axis
Axis Number
5
Initial Value [deg]
0.0000
Upper Limit [deg]
125.0000
Upper Soft Limit [deg]
125.0000
Lower Soft Limit [deg]
-125.000
Lower Limit [deg]
-125.000
Dynamic Properties
Preview Motion
Step Size
10.0000
Current Value
0.0000
OK
Cancel

J6

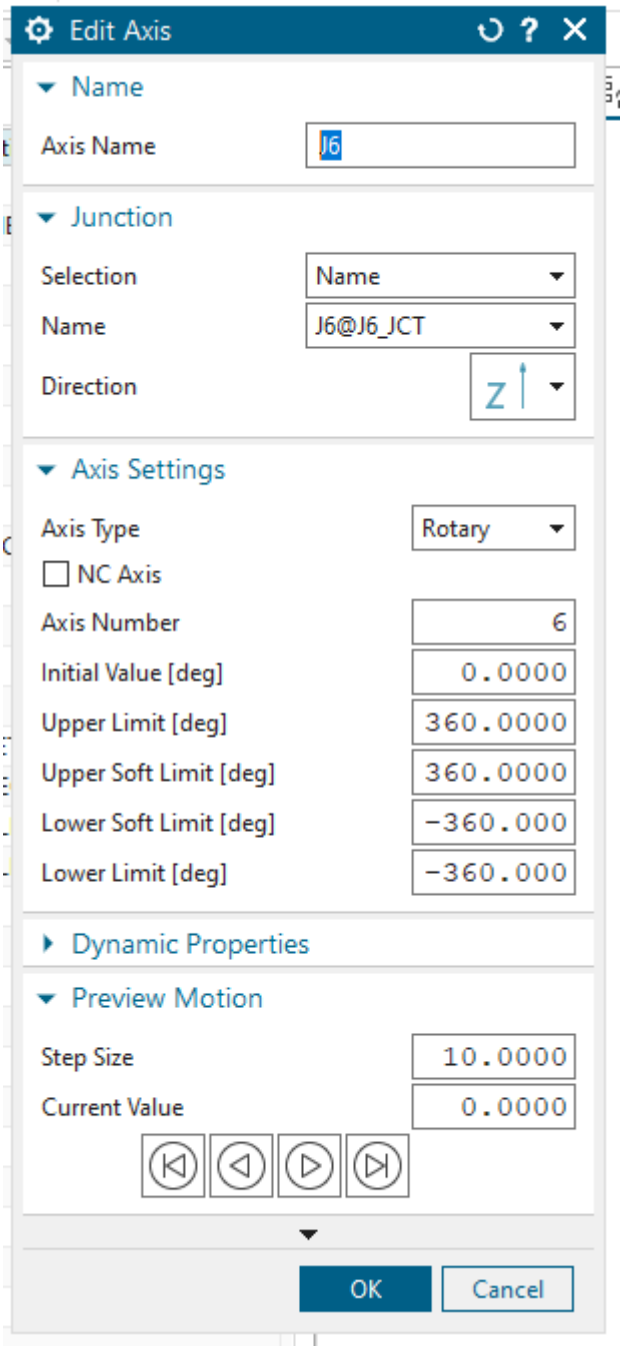
Edit Axis
Name
Axis Name
J6
Junction
Selection
Name
Name
J6@J6_JCT
Direction
Z
Axis Settings
Axis Type
Rotary
NC Axis
Axis Number
6
Initial Value [deg]
0.0000
Upper Limit [deg]
360.0000
Upper Soft Limit [deg]
360.0000
Lower Soft Limit [deg]
-360.000
Lower Limit [deg]
-360.000
Dynamic Properties
Preview Motion
Step Size
10.0000
Current Value
0.0000
OK
Cancel

Positioner

Specification

Item		Specifications
Controlled axes		2 axes (J1, J2)
Motion range	J1 axis	270° (-135° to +135°) 4.72 rad (-2.36 rad to +2.36 rad)
	J2 axis	480° (-240° to +240°) 8.38 rad (-4.19 rad to +4.19 rad)
Maximum speed	J1 axis	120°/sec 2.09 rad/sec
	J2 axis	190°/sec 3.32 rad/sec
Max. load capacity		500 kg
Allowable load moment	J1 axis	180 kgf · m 1764 N · m
	J2 axis	70 kgf · m 686 N · m
Allowable load inertia	J1 axis	3061 kgf · cm · s^2 300 kg · m^2
	J2 axis	1020 kgf · cm · s^2 100 kg · m^2
Drive method		Electric servo drive by AC servo motor
Weight		About 295 kg
Installation environment		Ambient temperature : 0 - 45°C Ambient humidity : Normally: 75%RH or less : Short time 95%RH or less (within 1 month) (No dew or frost allowed) Vibration : 0.5G (4.9m/s^2) or less

POSITIONER AXIS A1

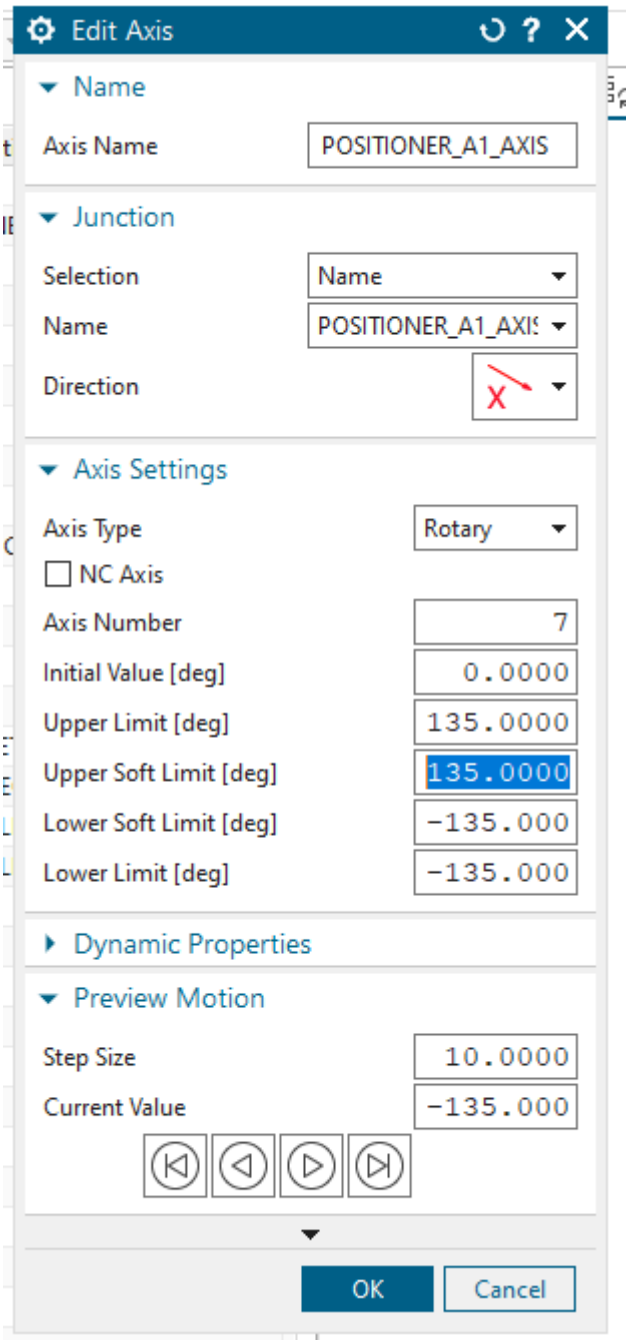

POSITIONER AXIS A2

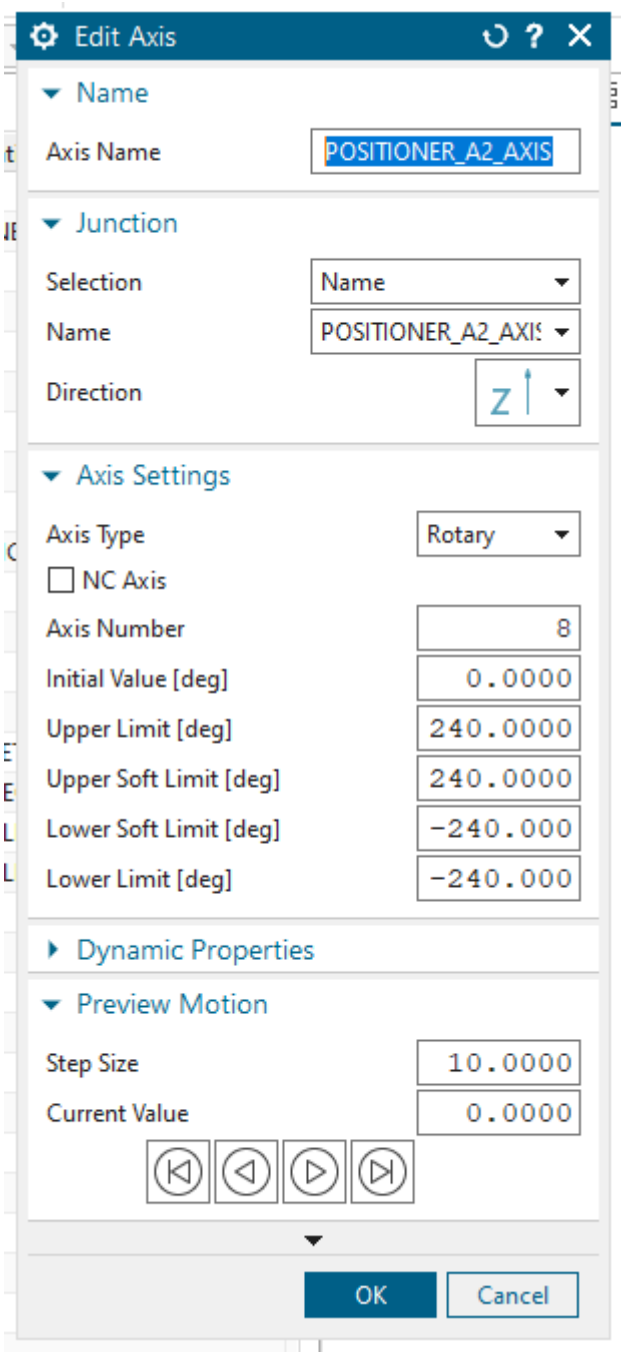

After completing all axes, right click on space in the Machine Tool Navigator open Preview Motion

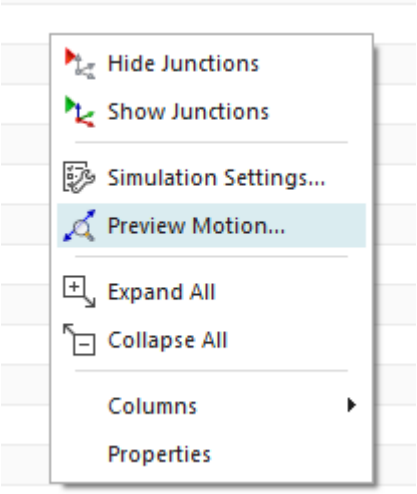

Click on “Show Machine Axis Positions” and verify the axes from the window below